Wattsan PA Laser Cleaning Machine Manual

Wattsan

Copyright Notice

Jinan Wattsan CNC Technology Co. Ltd (hereinafter referred to as Wattsan CNC Technology) reserves the right to make changes to the products and specifications described in this manual without prior notice to the user.
Wattsan CNC Technology shall not be liable for any direct, indirect, special, incidental, or consequential damages or liabilities arising from misuse of this manual or its products, trademarks, or copyright objects belonging to their owners.

Address:

No 1588, Hongxin Road, Tianqiao District, Jinan City, Shandong Province,

TEL: +86-13153105797

E-mail: info@wattsan.com

Contents

Chapter 1. Introduction 10
1.1 Main purpose and scope of the equipment 10
1.2 Basic Operating Requirements 10
1.3 Impact on the environment and people 10
Chapter 2. Safety instructions and precautions 10
2.1 Overview 10
2.2 Ensuring the safety of working with equipment 10
2.3 Machine protection systems 11
2.4 Laser Safety Warning 11
2.4.1 Eye and skin protection 11
2.4.2 Fire protection 11
2.4.3 Secondary radiation hazards 12
2.4.4 Smoke poisoning hazards 12
2.4.5 Additional sources of danger 12
2.5 Electrical safety 13
2.6 Obligations of the Operator 13
Chapter 3. Component Inspection and Installation 14
3.2 Machine Placement 14
3.3 Requirements for the environment 14
Chapter 4. Equipment design 15
4.1 Main components of the machine 15
4.2 Laser Machine Head (Laser Gun) 16
Chapter 5. Setup and operation 17
5.1 Connecting the Gas Supply 17
5.2 Connecting the Power Supply 17
5.4 Setting up fixed-focus support module 18
5.5 Setting up Side-blown module 19
5.6 Procedure for turning on the equipment 19
5.7 Machine Shutdown Procedure 20
Chapter 6. Software Description 20
6.1 Introduction to Software Functions 20
6.2 Home Screen 20
6.3 System parameter 22
Chapter 7. Maintenance 23
7.1 Peripheral Equipment Maintenance 23
7.2 Cleaning and Maintaining the Optical System of the Machine 23
7.2.1 Installation and replacement of the optical element: 23

7.2.2 Protective Lens Removal Diagram 24
7.2.4 Steps for cleaning optical elements. 24
7.2.5 Storage of optical elements: 25
Chapter 8. Troubleshooting 25
Chapter 9. Transportation and storage 26
9.1 Transporting the Machine 26
9.2 Machine Transportation and Delivery Features 26
9.3 Machine conservation 26
Chapter 10. Warranty 27

Dear customer!

Thank you for purchasing our equipment. We hope that this work will delight you for a long time.

The machines are manufactured in accordance with global standards. Each piece of equipment undergoes pre-sale preparation.

First of all, we strongly recommend that this manual be read carefully and completely before using the equipment. Failure to comply with certain points of the Operating Manual may result in injury to personnel and/or damage to equipment!

Follow the instructions in this manual. This will not only make the work easier but also make the use of the equipment safe and long-term. Please follow these instructions carefully.

This document is intended to provide an overview of the basic technical data and requirements for the use of the Wattsan machine.

In the event that the equipment is transferred to another customer, this document shall be transferred with it.

The manufacturer reserves the right to make changes and improvements to the design that do not impair the declared characteristics of the equipment.

Information about signs and symbols

In this instruction manual, the following designations, signs and symbols are used to convey particularly important information:

	This indicates a hazardous situation that could result in serious injury or death if the specified instructions are not strictly followed.
	Indicates a potential hazard that could result in minor injury or damage to the product.
	It contains important information about the safe and correct handling of the product.
	This component is energized by an electric current. In these places, strictly follow the safety rules when working with electricity.
	Caution: Laser beam hazard.

Read the instructions carefully before starting.

Note!

The equipment you directly purchased may differ from the equipment shown in the figures.

	Untrained personnel should not be allowed to work with this equipment or install it.
	The equipment complies with safety class 4. The use of this equipment may lead to the following consequences: • Ignition of nearby materials • Materials exposed to laser radiation can become sources of dangerous gases • Laser beams can cause direct harm to humans
MUST-DO	The location of the equipment must be equipped with fire extinguishing equipment. It is forbidden to store flammable and explosive substances near the device.
MUST-DO	The user must ensure that the material to be processed is suitable for laser processing in order to avoid risks to the life and operation of the equipment.
FORBIDDER	The operator must not leave the equipment unattended while it is in operation. The equipment must be turned off at the end of operation.
	The use of highly reflective materials is prohibited to avoid the reflection of the laser beam on a person.
	The equipment must be located in a dry, uncontaminated place. The temperature inside the room should be 10-40 Co. Humidity should be in the range of 5-70% (provided there is no condensation).
	The equipment operates from an alternating power supply of 220 / 380 V with a frequency of 50 / 60 Hz. It is forbidden to use the equipment without a voltage stabilizer.

<u>Attention!</u>

The seller is not responsible for the improper use of the equipment and if the user fails to take precautions.

Specifications

Model	PA100/ PA200/ PA300		
Scanning range (mm)	100*100		
Focus distance (mm)	254		
Laser gun model	FWH50-P10A		
Connector Type	QCS d17mm		
Cooling system	Air		
Laser Head Weight (kg)	0.76		
Max. Output Power (W)	100	200	300
Machine Max Power Consumption (W)	900	1100	1800
Maximum current for the entire system (A)	5	6	9
Max. Modulation Frequency (Hz)	4000	3000	3000
Pulse Width (ns)	2-500	13-500	13-500
Laser Source Manufacturer	JPT		
Laser Working Type	Pulse		
Beam shape			
Optical Cable Length (m)	4		
Wavelength (nm)	1064±5		
Power adjustment range (%)	10~100		
Output Parameter Instability (%)	±1.5		
Ambient temperature range (℃)	10~40		
Ambient humidity value (%)	<70		
Power Supply Configuration	220±10% V AC 、 50/60Hz		
Maximum fluid pressure in the cooling system (Bar)	4		
Gas pressure in the system (mPa)	0.5～0.8		
Air flow (L/m)	≥10		
Dimensions (LxWxH) (mm)	1090x650x1080		
Weight (kg)	<70		
Classification of the laser system	Class 4		

Equipment

Name	Quantity
Laser cleaning machine	1 pc
Protective lens D48x3	4 pcs
Laser gun frame set	1 pc
Keys Set	1 pc
Air connection tube (8mm outer diameter)	1 pc
Ground cable	1 pc
Protective Glasses in a case	1 pc
Machine manual	1 pc

CHAPTER 1. INTRODUCTION

1.1 MAIN PURPOSE AND SCOPE OF THE EQUIPMENT

Wattsan manual laser cleaning machine is the most modern, high-tech, and delicate way to remove organic and inorganic surface contamination without damaging the base material.

With the help of laser cleaning, it is easy to remove rust from metal products, layers of paint, varnish, and other coatings or deposits, degrease surfaces, and clean the effects of oxidation or carbon deposits.

In addition to metal surfaces, it cleans adhesive and electroplated materials. As well as products made of gypsum and stone.

1.2 BASIC OPERATING REQUIREMENTS

1) Connected ground: Grounding resistance <4 Ω.

2) It is required to install a voltage stabilizer that ensures the stabilization of the machine's supply voltage.

3) Good ventilation is required to prevent the accumulation of dust and combustion products.

4) To cool the laser source and laser head, it is necessary to properly configure and control the operation of the chiller. It is specialized equipment that cools and circulates water and requires the use of distilled water only.

5) Operation of the equipment is allowed only with a connected compressed air or auxiliary gas supply system.

6) To prevent fire, the workplace must be equipped with a suitable fire extinguisher.

7) There should be a free area around the machine of about 1 m on each side.

1.3 IMPACT ON THE ENVIRONMENT AND PEOPLE

The laser machine belongs to the IV class of laser equipment. Its laser beam and reflected light can cause damage to the human body (especially the eyes). The operator and operating personnel should pay attention to eye protection and use special glasses (with radiation protection with a wavelength range of 1080 nm).

CHAPTER 2. SAFETY INSTRUCTIONS AND PRECAUTIONS

2.1 OVERVIEW

Before operating the machine and performing daily maintenance, the operator should read this chapter carefully, learn the safety precautions and requirements of the machine, and follow the appropriate precautions.

2.2 ENSURING THE SAFETY OF WORKING WITH EQUIPMENT

1) It is necessary to appoint an industrial safety specialist for the operation of the equipment, determine the scope of his responsibilities, and provide safety training for the machine operator.

2) Specify the machine location area, set a warning card for entering and exiting the machine area, specifying: machine power, type of laser source, type of eye protection used, full name of the industrial safety specialist, etc.

3) The machine operator must receive special training.

4) For additional protection, use a separate room for working with laser equipment. At the entrance to the laser equipment work area, machines connected to the safety system are installed so that when the contact sensors open (the door opens), the laser radiation disappears.

5) Keep the machine key in a safe place; do not leave it in the lock when the machine is not in use.

2.3 MACHINE PROTECTION SYSTEMS

- **Emergency stop button:** When pressed, the laser light will stop, and the controller will turn off.
- **Gas pressure sensor:** When the gas pressure is low, the laser radiation will not start.
- **Laser Source Temperature Sensor:** If the protective lens overheats, there will be an error, and the laser emission will stop.
- **Temperature sensor on the QCS/QBH connector:** If the connector overheats, an error will appear, and the laser radiation will not start.
- **Connection sensor on the QCS/QBH connector:** If the laser gun is not properly connected or tightly connected to the fiber optic at the QCS/QBH connector location, an error will appear, and the laser light will not start.

Additionally, the machine might have a light signal indicator, which lights up when the machine is working.

!	Laser equipment of hazard class 4 is recommended to be used in a special protective room, with a lock installed on the door connected to the machine. The laser operating area must be equipped in accordance with local regulatory requirements.

2.4 LASER SAFETY WARNING

⚠	**Never point the laser beam at people or animals. High-power laser radiation can cause serious burns or damage to vision. Always keep an eye on the direction of the beam and control its movement.**

2.4.1 EYE AND SKIN PROTECTION

Fiber-optic laser sources can damage the retina of the eye because the wavelength of the laser beam is visible to the human eye. Both types of lasers can cause cataracts of the eye and skin burns. Therefore, appropriate protective measures are applied when adjusting the laser. This machine is equipped with a fiber laser, so it is strictly necessary to wear special safety glasses (with radiation protection with a wavelength range of 1060-1080 nm).

Personal protective equipment (PPE) must not be damaged. If a PPE item is damaged, stop work and replace it with a similar one that meets safety requirements.

A combination of face shields, masks, filters, and/or goggles will provide better protection while the equipment is running. For example, an additional welding helmet (with appropriate filter glasses) that protects the wearer from UV and visible radiation should also be worn over laser goggles. A welding helmet can also protect the operator from injury due to hot splashes, metal particles and sparks. All personnel working near the area must also wear PPE.

⚠	**Parts can be very hot even after the cleaning process is complete. Take steps to prevent skin damage by wearing protective clothing such as flame-retardant gloves, caps, leather apron, and other flame retardant clothing. Sleeves and collars should be buttoned.**

2.4.2 FIRE PROTECTION

The use of oxygen, as well as sparks during operation, can easily cause a fire.

Therefore, there should be no flammable and explosive objects in the working area of the machine.

Fire extinguishers should be nearby and accessible, and staff should be trained in their use.

2.4.3 SECONDARY RADIATION HAZARDS

During cleaning, both visible and invisible light radiation is generated. The interaction between high-power laser light and the target materials can create a plasma that produces UV radiation and "blue light" that can cause conjunctivitis, photochemical damage to the retina and/or a sunburn-like skin reaction. Workers who are exposed to invisible ultraviolet light without proper protection can sustain permanent eye damage. Even short-term exposure to invisible ultraviolet light during laser operation can cause blurred vision, burning, watery eyes, eye pain, and irritation (a feeling of sand in the eye).

Each employee who is near the laser during its operation must wear appropriate laser safety goggles and protective clothing.

2.4.4 SMOKE POISONING HAZARDS

The smoke emitted from the material during laser treatment can consist of very small particles and gases; the smoke and gas are formed from a mixture of fumes of the material being treated, paints, coatings, taking into account chemical reactions and air pollutants. Smoke can negatively affect the lungs, heart, kidneys, and central nervous system.

When the laser interacts with materials such as plastics, metals, and composites, the material can start to evaporate. Often the fumes and mist are not visible, but they are highly toxic and pose a serious health risk.

Cleaning material in a poorly ventilated confined space is extremely dangerous. Dangerous concentrations of toxic fumes and gases can build up very quickly, causing loss of consciousness or death by suffocation.

Keep your head away from smoke while working. Always work in an area with adequate ventilation to ensure safe breathing air.

Hazardous vapors must be captured and pumped out. Use a fume extraction system to remove vapors, particles, and hazardous debris from the machine operating area.

Read and follow the safety guidelines and warning labels for all materials used.

In confined spaces and other circumstances, a respirator may also be required.

Regular air monitoring should be carried out to determine the levels of hazardous vapors in the area of operation.

2.4.5 ADDITIONAL SOURCES OF DANGER

1. **Noise level during operation.**

In some operating conditions, the noise level emitted by this equipment may exceed 80 dB(A)**,** which may be dangerous according to the requirements of some regulatory authorities. The exact sound pressure level should be measured under real operating conditions. To protect your hearing, you may need to use **headphones** or other **noise-canceling devices** (such as soundproofing screens or partitions). Local codes, regulations, and requirements must be followed.

2. Exposure to non-ionizing radiation on implants.

No additional effects on implants, except for those described above, have been revealed.

2.5 ELECTRICAL SAFETY

1) Make sure the installation is properly grounded.

2) Make sure the correct AC supply voltage is used before applying power to the unit. Using the wrong voltage may damage the installation.

3) Never use the device in a humid or wet environment. Do not touch electrical contacts and switches with wet hands to avoid electric shock.

4) Do not open the electrical cabinet or change the machine parameters without consulting the manual. If you need to change something, then these changes must be approved by the equipment supplier. Before modifying, record the original values so that the machine can be restored to its original parameters if necessary.

5) Always turn off the device when not in use. Never leave the laser machine running unattended.

	After turning off the power to the machine, you must wait at least 5 minutes, and only then you can touch the electrical circuit of the machine. For a period of time after the power is turned off, there may be a high voltage in the machine's electrical system, which can cause harm to people and equipment.

2.6 OBLIGATIONS OF THE OPERATOR

- The operator must undergo special training in order to start working on the machine.
- Follow the instructions for regular maintenance of the appliance to keep it operational and prevent accidents.

	It is forbidden to work on faulty equipment. If a fault is detected, turn off the equipment and unplug it from the electricity. Inform the specialists. Do not repair the equipment yourself.

CHAPTER 3. COMPONENT INSPECTION AND INSTALLATION

Upon receipt, inspect the equipment for any damage in transit. Record all damage, if any. The transport company is responsible for the integrity of the equipment.

After opening the package, check the complete set. In case of non-compliance, please contact the supplier company.

3.2 MACHINE PLACEMENT

The machine must be installed on a flat surface without bevels and slopes. It is necessary to leave free space on the sides of the machine of at least 1 m. After installation, the stoppers on the wheels of the machine should be fixed.

The space between the workstation and the machine should be freed up for quick and unhindered access to the machine panel.

3.3 REQUIREMENTS FOR THE ENVIRONMENT

1. Ambient temperature

When operating the machine, the ambient temperature should be between +10 °C and +40 °C. When the equipment is switched off, the ambient temperature should not be lower than + 4 °C. If the ambient temperature is above 40 °C, a device that lowers the temperature (e.g. air conditioner) must be installed in the room.

2. Humidity

For the correct operation of the equipment, it is recommended to use it at a relative humidity of <70%. A wet room is not suitable for the operation of the machine, as it corrodes it, which leads to the failure of the electrical and mechanical systems of the machine.

!	It is forbidden to use the equipment at a relative humidity of more than 70%.
	Do not use the equipment at temperatures below the dew point.

Temperature	Humidity															
	20%	25%	30%	35%	40%	45%	50%	55%	60%	65%	70%	75%	80%	85%	90%	95%
16℃				0	2	4	5	7	8	9	10	11	12	13	14	15
18℃			1	3	4	6	8	9	11	12	13	14	15	16	17	18
21℃		1	3	5	7	9	11	12	13	14	16	17	18	18	19	21
27℃	2	5	8	10	12	13	16	17	18	19	21	22	23	24	25	26
29℃	4	7	10	12	14	16	18	19	21	22	23	24	26	27	28	28
32℃	7	10	12	15	17	19	21	22	23	25	26	27	28	29	31	31
35℃	9	12	15	17	19	21	23	24	26	27	29	30	31	32	33	34
38℃	11	14	17	20	22	24	26	27	29	30	31	33	34	35	36	37

3. Equipment Cooling

The equipment is cooled by air circulation inside the cabinet. Therefore, it is important that the parts inside the cabinet are not contaminated with dust and dirt.

CHAPTER 4. EQUIPMENT DESIGN

4.1 MAIN COMPONENTS OF THE MACHINE

4.2 LASER MACHINE HEAD (LASER GUN)

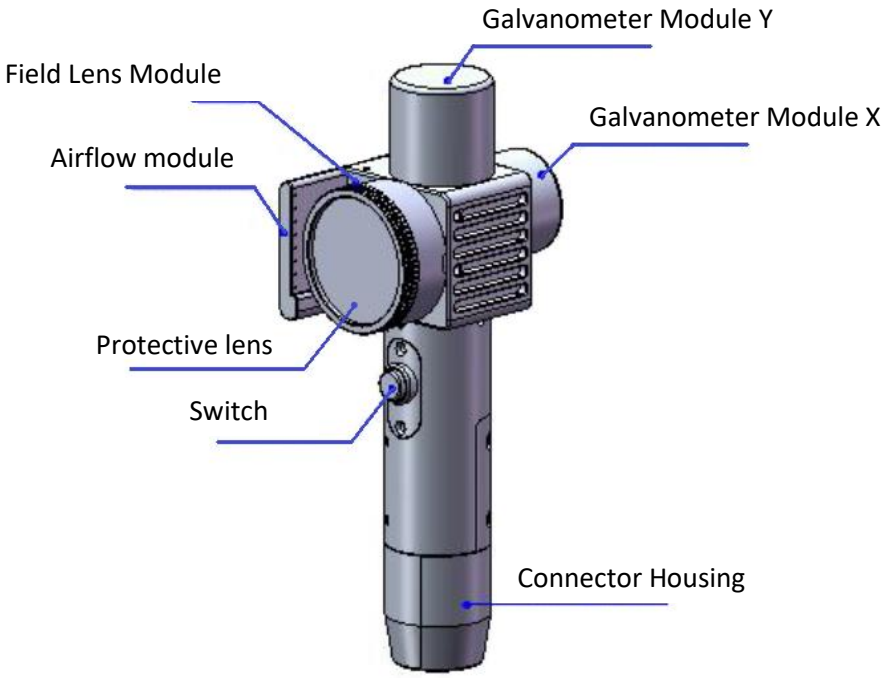

CHAPTER 5. SETUP AND OPERATION

All electrical connections must be made before power is supplied to the unit. Whenever possible, all connectors should be secured with screws to ensure proper operation. The first start of the machine should be carried out by a specialist and carried out strictly in accordance with the rules set out in this manual. Correct setup is the basis for ensuring the normal operation of the machine.

!	The bending radius of the fiber optic cable should be at least 200 mm.

5.1 CONNECTING THE GAS SUPPLY

Install the hose from the air compressor into the air fitting on the back panel.

When using the machine, it is necessary to use compressed air.
Connect the compressor with the filter to the air supply system in the machine. Before connecting, make sure that the hoses inside are not dirty or have foreign objects, and the hoses are not kinked along the entire routing route.

Choose an oil-free air compressor so it fulfills the gas requirements.
Gas requirements:
- Gas pressure in the system 0.5mPa～0.8mPa
- Air flow ≥10L/m

!	The air supply system must be equipped with a filter with a purification accuracy of 5 µm and a moisture and oil separator. Otherwise, the optics of the machine will quickly fail.

5.2 CONNECTING THE POWER SUPPLY

To connect the electrical power, follow these steps:

1) Connect to the mains power supply at the above voltage, phase, and frequency.

2) The unit must be permanently connected to a dedicated AC mains with a circuit breaker that meets the requirements of the equipment. It should be in the immediate vicinity of the installation, within the reach of the operator, and marked as a disconnect device for the installation.

3) Electrical wiring must comply with all national regulatory requirements. Electrical connections must be made by personnel with knowledge of electrical safety.

4) The unit must also be connected through a voltage stabilizer of suitable power.

5) The installation must be securely grounded.

!	**It is forbidden to use alternative sources of electricity, such as generators, etc.** **A failure in the power supply during operation can lead to equipment failure.**

The grounding cable must be connected to the bus in the machine in advance and removed from the housing (yellow-green cable), if it is not available, you must connect it yourself.

To connect the ground:

1. Remove the side cover of the machine. Perform the procedure carefully to avoid damage to the fiber optic cable. **You can remove the cover only after the main power is turned off**.

2. Connect the cable to the ground bus. The cable can be removed from the housing through the machine power cable hole.

3. Put the cover back on.

5.4 SETTING UP FIXED-FOCUS SUPPORT MODULE

1. Install the frame on the laser gun
2. Tighten it with 4 screws.
3. Install and tighten F254 length extensions with 4 screws.

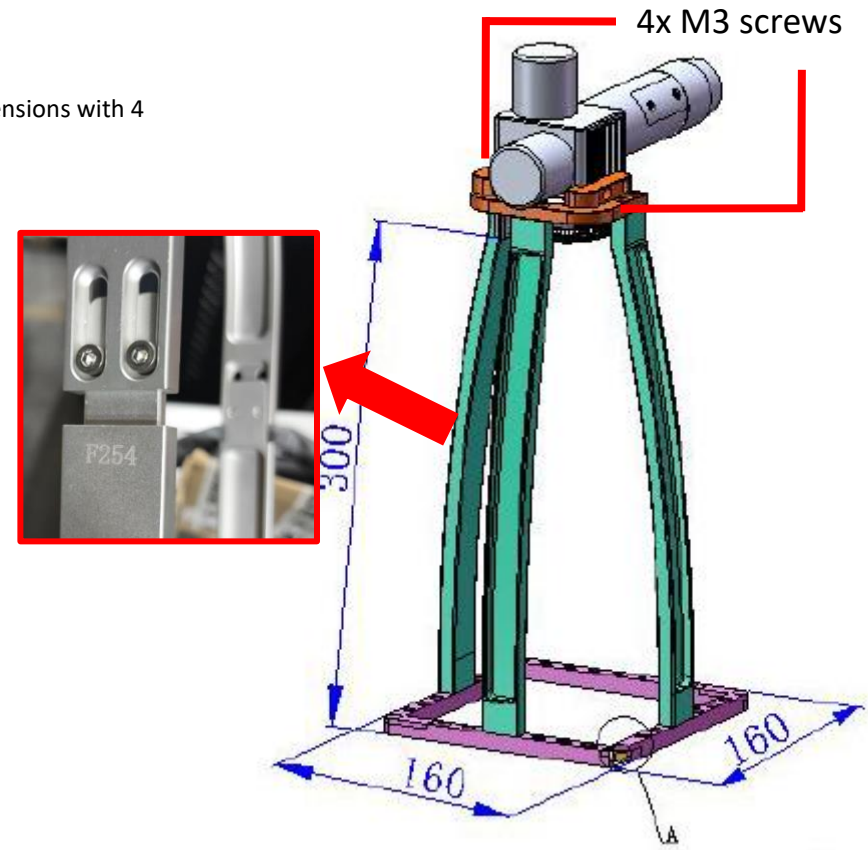

5.5 SETTING UP SIDE-BLOWN MODULE

1. Install adaptor for side-blow module on the laser gun.
2. Tighten it with 2 screws.
3. Install side-blow module into adaptor.

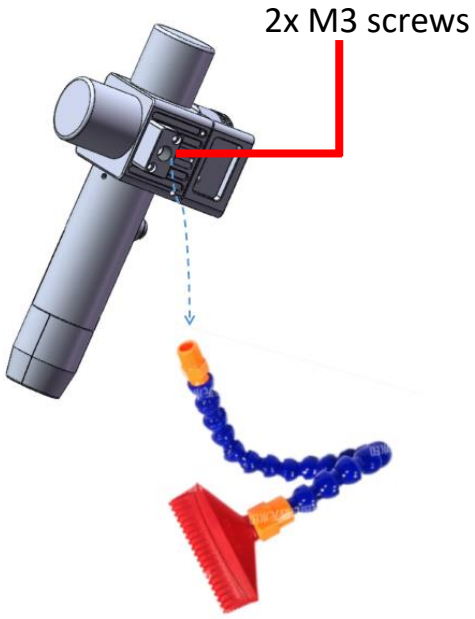

5.6 PROCEDURE FOR TURNING ON THE EQUIPMENT

1. Turn on the circuit breaker on the back of the machine.

2. On the front panel, turn the emergency shutdown button clockwise.

3. Press the laser activation green button (it lights on).
4. Turn on the compressor (or open a valve on a gas tank).

!	Before turning it on, make sure that there is no protective cap on the lens.

5.7 MACHINE SHUTDOWN PROCEDURE

1. Press the laser shutdown button.
2. Turn the laser activation key to the OFF position.
3. Press down the emergency stop button.
4. Turn off the circuit breaker on the back of the machine.
5. Turn off the compressor, turn off the gas.

Place protective cap back on the lens.

CHAPTER 6. SOFTWARE DESCRIPTION

6.1 INTRODUCTION TO SOFTWARE FUNCTIONS

The system menu consists of [Main Interface], [System Parameters], and [Advanced Parameters]. Different parameters related to scanning and laser can be set in the main interface, which can display system and alarm status in real time; For system parameters, system-related parameters, alarm parameters, and authorization management can be set. For advanced parameters, higher-level restrictive parameters can be set, and a password is required to enter the advanced parameters.

The main interface consists of [Status Display Area 1], [Status Display Area 2], [Parameter Area] and [Menu Area].

6.2 HOME SCREEN

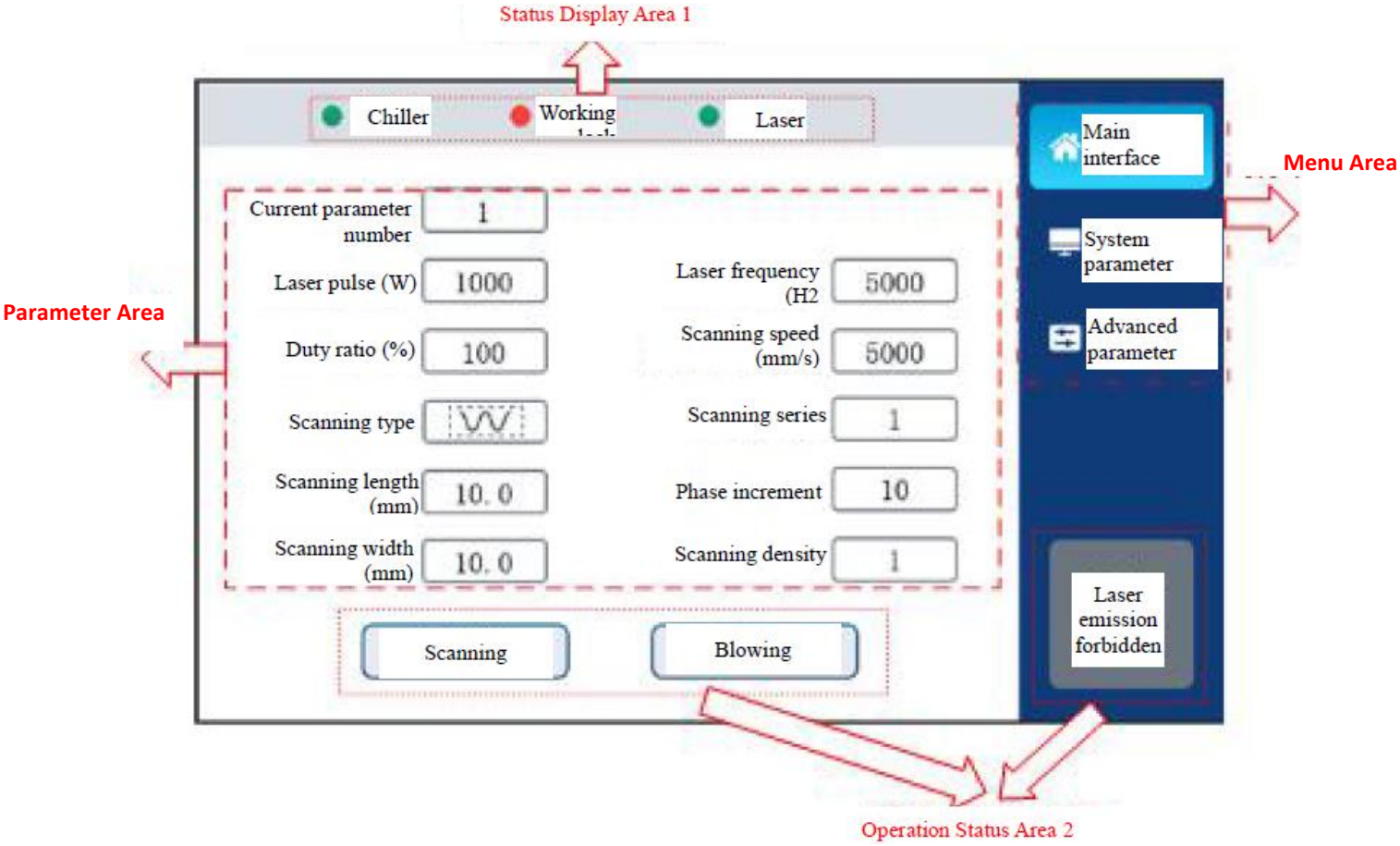

[Status Display Area 1]: Monitor the trigger of the working lock signal, laser alarm, and water cooler alarm. Normal machining can only be carried out when the green color is displayed.

[Status Display Area 2]: Display machining status, and manual touch can be operated. Click < Scan > to manually control the oscillation of the galvanometer when idle, and click < Blow > to manually blow when idle. When the signal is given, the color of the relevant icon will change. In the state of <Laser Emission Forbidden>, the system will not emit laser or start the trigger of the key; When laser-

emission machining is required, you need to click the icon <Laser Emission Forbidden> to make it turn into the orange <Laser Emission Allowed>. When there is no alarm, press the "Start" key, and then control the laser emission, oscillation and blowing according to the parameters in the Parameter Area. At the same time, the orange sign <Laser Emission Allowed> will turn red, indicating that laser is being emitted.

[Parameter Area]: includes scanning parameters and laser parameters

Current parameter number: 9 sets of parameters can be set and selected in the system. Current parameters can be directly selected. Parameter number can be selected in linkage mode with external PLC. For the calling mode, please refer to the linkage description of system parameters.

Laser power: Used for setting the peak power of the laser.

Laser frequency: Used to set the laser PWM modulation signal frequency.

Laser duty ratio: Used to set the duty ratio of the PWM modulation signal of continuous laser; Advanced parameters should be equipped with a continuous laser.

Laser pulse width: Used to set the pulse width of pulsed laser; Advanced parameters should be equipped with pulsed laser.

Scanning speed: Used to set the scanning speed of the galvanometer.

Scanning length: Used to set the scanning length of the galvanometer.

Scanning width: Used to set the scanning width of the galvanometer.

Scanning width (mm)	Scanning speed mm/s (upper limit)
200-300	30000
50-200	20000
40-49	18000
30-39	14000
20-29	12000
10-19	6000
5-9	3000
3-5	2000

Scanning type: Used for setting the scanning waveform of galvanometer.

Scanning series: Used to set the number of sine waves during scanning. Special parameters for sine wave-filled rectangles.

Phase increment: Used to set the change value of each phase during scanning. Special parameters for sine wave-filled rectangles and straight line rotating into circle.

Scanning density: Used for setting the density of each sine wave during scanning. Special parameters for sine wave-filled rectangles.

Scanning interval: Used for setting the interval between each straight line when scanning and filling. Special parameters for line-filled rectangles.

6.3 SYSTEM PARAMETER

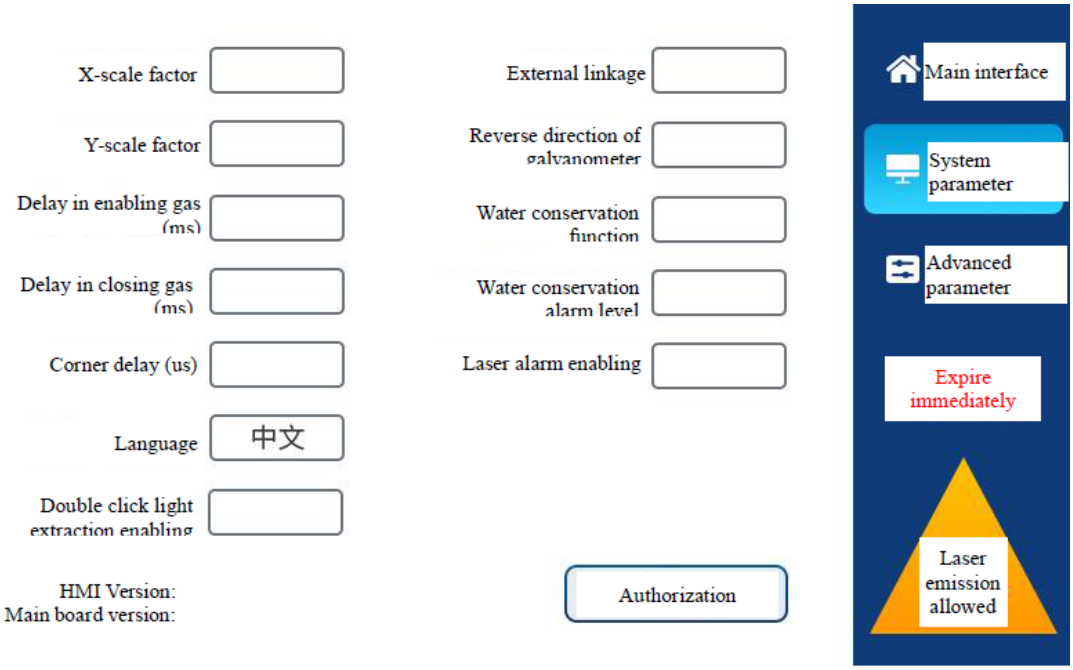

X-scale factor: Used for setting the proportion between the scanning length of the X-scale galvanometer and the actual laser-emission length, which is related to the focal length and the galvanometer. The smaller the scale factor, the longer the length actually scanned.

Scale factor: Used for setting the proportion between the scanning length of the Y-scale galvanometer and the actual laser-emission length, which is related to the focal length and the galvanometer. The smaller the scale factor, the longer the length actually scanned. When the set length is inconsistent with the actual length and there is a slight difference, it can be modified by this parameter; when no modification is required, it is generally set by the manufacturer.

Model of field lens	X coefficient	Y coefficient
F254	210.3	250.3

Delay in enabling gas: When starting machining, the delay in enabling gas can be set. The emission of laser will start after blowing is delayed for a period of time by pressing the external start button.

Delay in closing gas: When stopping machining, the delay in closing gas can be set. Stop blowing after stopping laser emission, and then delaying for a period of time when processing is stopped.

Language: Used for language switch.

External linkage: Used to switch the parameter number through external IO. When not enabled, the main interface displays the current parameter number, and the parameter number can be manually selected; When enabled, the main interface displays the linkage parameter number, which needs to be switched through the external IO port. During linkage, attention should be paid to switching to the main interface for machining.

Reverse direction of galvanometer: Used to deflect the scanned pattern by 90 degrees on the panel.

Water conservation function: Used to enable water conservation. When the water cooler gives an alarm, it will produce an alarm signal.

Water conservation alarm level: Set the alarming logic level of water cooler.

Laser alarm enabling: Enable the laser alarm. When the laser gives an alarm, an alarm signal will be produced.

Laser alarm level: Set the alarming logic level of laser machine.

Authorized by: Used for staging authorization management of main board.

CHAPTER 7. MAINTENANCE

To ensure the normal operation of the machine, it must be regularly maintained.

7.1 PERIPHERAL EQUIPMENT MAINTENANCE

Maintenance period	Maintenance content	Purpose
Once a year	1. Check that the chiller body is dry, clean and well ventilated.	For long-term operation
Monthly	1. Clean the machine body (do not use gasoline, acids, or metal brushes).	For long-term operation
	2. Check for gaps in the pipelines	Make sure there are no leaks
Weekly	1. Clean air filters.	To ensure the normal operation of the laser head.
Daily	1. Inspection of the protective glass for contamination and timely replacement/cleaning in case of contamination.	To ensure the normal operation of the laser head.

7.2 CLEANING AND MAINTAINING THE OPTICAL SYSTEM OF THE MACHINE

!	If the optical element is damaged, it must be replaced as soon as possible. It is forbidden to operate the machine with damaged optics.

7.2.1 INSTALLATION AND REPLACEMENT OF THE OPTICAL ELEMENT:

1) Before installing the optical element, wear clean clothes, wash your hands with soap and water, and wear clean white thin gloves. During any procedures, try not to touch the surface of the optical element.

2) When assembling/disassembling the optical system, do not blow on the optical elements. When installing optical elements, make sure that the installation area is not dusty or dirty.

3) When installing/replacing the optical element, do not apply too much pressure to it, as this may cause damage.

4) Be extremely careful when removing the optical element from the box in which it is stored. The optical element should be held only by its edges. Avoid dust on the optical element. After installing the optical element, blow it out with clean air from dust and other contaminants. If dirt or dust has accumulated on the optical element, it should be cleaned immediately.

7.2.2 PROTECTIVE LENS REMOVAL DIAGRAM

1. Unscrew the locking ring and remove it.
2. Take out and replace the protective glass.
3. Assemble the device in reverse order.

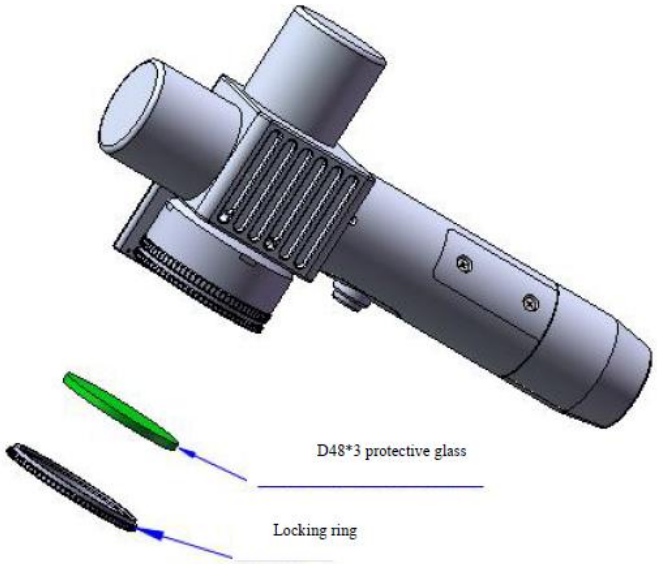

7.2.4 STEPS FOR CLEANING OPTICAL ELEMENTS.

!	Work on cleaning and replacing optical elements must be carried out in a clean room!
	Optical elements must not be rinsed with water or detergents.

There are different cleaning methods for different optical elements. If the surface of the optical element is flat and does not have a frame, then you can use special paper for cleaning the optics. If the surface of the optical element is curved or has a frame, and it is not possible to use special cleaning paper to clean it, then clean lint-free sticks should be used.

<u>Cleaning methods</u>:

1) Using special paper for cleaning optics.

Use clean air to blow the dust off the surface of the optical element. Use alcohol and special cleaning paper. Position the optical element horizontally on the special cleaning paper. Pour 2~3 drops of high-purity isopropyl alcohol or acetone onto the optical element and rub slowly, in the direction of the operator, with special cleaning paper on the surface of the optical element until the surface of the optical element is cleaned. Do not press the optical element and try not to scratch it. In no case rub dry on the surface of the optical element; use alcohol or acetone of high purity!

2) Using a special lint-free stick for cleaning optics.

Use clean air to blow the dust off the surface of the optical element. Pour 2~3 drops of isopropyl alcohol or high-purity acetone onto the optical element. Gently pinch the optical element at the edges. Wipe the surfaces of the optical element with a lint-free wand in one-way motions. **Do not allow backward movements on the surface of the optical element!** Do not use used wipes or lint-free sticks!

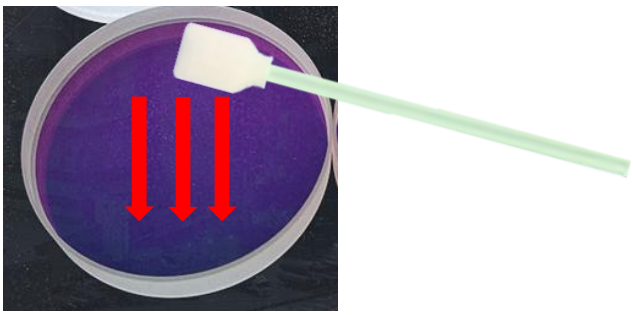

7.2.5 STORAGE OF OPTICAL ELEMENTS:

1) The storage condition of the optical element affects its quality.

2) The ambient temperature should be 10~40C. Do not freeze the optics!

3) Optical elements must be stored in a separate box and must not be subject to vibration; otherwise, they can be damaged.

CHAPTER 8. TROUBLESHOOTING

Defect	Analysis of the cause	Troubleshooting method
The point of the laser beam does not move	• The scan width is too small. • The connector of the laser head control cable is loose. • The motor or control card is damaged.	• Set a larger scan width (seam width). • Tighten loose connections. • Please contact us.
Sudden loss of energy during cleaning	• There are foreign objects or damage on the optical lens. • Laser malfunction or abnormality.	• If the cause is a protective lens, clean or replace it. For other lenses, please contact us. • Please contact us.
The laser head heats up	• The optical lens is dirty or damaged. • Optical path deviation.	• Clean or replace the protective lenses. For other lenses, please contact us. • Align the laser beam.
Laser Source Alarm	• Error in the operation of the laser source.	• Check the laser source, if the alarm light is on, please contact us.
Air pressure alarm	• There is no auxiliary gas/air supply.	• Check the air/gas pressure in the system. Whether the compressor is working, whether the gearbox in the cylinder is open.
Protective glass burns quickly and easily	• Gas is not connected • Contaminated gas / missing filter, moisture and oil separator. • The protective glass is installed with dirt or dust on it.	• Connect the gas or air source and check the pressure. • Install or replace the filters downstream of the air compressor. • Replace the protective glass in a clean room, with clean hands.
Temperature alarm	• The double protective lenses or focal lens are damaged. • The laser beam is not centered. • Poor quality of the protective lens.	• Inspect the lenses for spots under the light. If there is damage or dirt, replace the lenses with new ones. • Check the position of the laser and center if necessary. • Make sure that the compressed air passes through the dehumidifier's oil-water separator. • Install protective lenses with good light transmission and resistance to high temperatures.

CHAPTER 9. TRANSPORTATION AND STORAGE

!	Before transportation, it is necessary to drain the water from the cooling system, as well as blow out the cooling system in order to remove the residual liquid.

9.1 TRANSPORTING THE MACHINE

1) A standard stacker or an electric forklift up to 1 ton can be used to load the machine.

2) The machine can be transported at a height of at least 100 mm from the ground.

9.2 MACHINE TRANSPORTATION AND DELIVERY FEATURES

1) When transporting the machine, it is necessary to avoid rain, moisture, strong inclination, rodents, potholes on the roads. The ambient temperature should be in the range from -10 ℃ to + 40 ℃, relative humidity should not exceed 70%. It is forbidden to store the machine in the open air for a long time.

2) Do not put other loads on the machine during transportation.

3) The packaging of the machine should protect from moisture and sunlight.

9.3 MACHINE CONSERVATION

If you want to suspend the use of the machine for a long time, then you need to drain the water from the cooling system, cover the machine with an impermeable material.

Storage conditions	
Temperature (℃)	-10 to 50
Humidity (%)	up to 70%

CHAPTER 10. WARRANTY

In case of equipment breakdown during its warranty period due to a defect caused by the manufacturer, repair is carried out by the supplier's company free of charge.

However, consumable parts such as optical parts (focusing lens, protective lens, reflective mirrors, etc.) are not eligible for warranty service.

For free repair or replacement of accessories, the buyer bears the cost of delivering new components from the place of their storage to the buyer's address, and, if necessary, the buyer bears the cost of the specialist's visit to the place of work.

If the equipment failure is caused by a defective part or assembly of the equipment, this part or assembly is repaired or replaced free of charge.

Defective components and parts must be returned to the supplier.

If the malfunction is not caused by the quality of parts or components of the equipment, the buyer will have to pay the cost of repair as well.

Warranty service is also not subject to malfunctions due to improper use of equipment, non-compliance with maintenance rules, operating conditions, as well as warnings specified in manuals and on warning plates that have arisen during the warranty period.

It is also a prerequisite that your equipment and peripheral devices are grounded and operated through a voltage stabilizer.