Wattsan 1313 A /1530 A
Fiber Laser Metal Cutting Machine Manual

Wattsan

Jinan Wattsan CNC Technology Co. Ltd

Copyright Notice

Jinan Wattsan CNC Technology Co. Ltd (hereinafter referred to as Wattsan CNC Technology) reserves the right to make changes to the products and specifications described in this manual without prior notice to the user.
Wattsan CNC Technology shall not be liable for any direct, indirect, special, incidental, or consequential damages or liabilities arising from misuse of this manual or its products trademarks or copyright objects belonging to their owners.

No part of this manual may be copied, reproduced, extracted or translated without prior permission.

Any names mentioned in this manual are used for identification purposes only and may be registered trademarks or copyrights of their respective owners.

Address:

No 1588, Hongxin Road, Tianqiao District, Jinan City, Shandong Province, China

TEL: +86-13153105797

E-mail: info@wattsan.com

Dear customer!

Thank you for purchasing our equipment. We hope that his work will delight you for a long time.

The machines are manufactured in accordance with global standards. Each equipment undergoes pre-sale preparation.

First of all, we strongly recommend that this manual be read carefully and completely before using the equipment. Failure to comply with certain points of the Operating Manual may result in injury to personnel and/or damage to equipment!

Follow the instructions in this instruction. This will not only make the work easier, but also make the use of the equipment safe and long-term. Please follow these instructions carefully.

This document is intended to provide an overview of the basic technical data and requirements for the use of the Wattsan machine.

In the event that the equipment is transferred to another customer, this document shall be transferred with it.

The manufacturer reserves the right to make changes and improvements to the design that do not impair the declared characteristics of the equipment.

Information about signs and symbols

In this operating manual and on the equipment, the following designations, signs and symbols are used to transmit especially important information:

	This indicates a hazardous situation that could result in serious injury or death if the specified instructions are not strictly followed.
	Indicates a potential hazard that could result in minor injury or damage to the product.
	It contains important information about the safe and correct handling of the product.
	This component is energized by an electric current. In these places, strictly follow the safety rules when working with electricity.
	Caution: Laser beam hazard.

Read the instructions carefully before starting.

Note!

The equipment you directly purchased may differ from the equipment shown in the figures.

	Untrained personnel should not be allowed to work with this equipment and install it.
	The equipment complies with safety class 4. The use of this equipment may lead to the following consequences: • Ignition of nearby materials • Materials exposed to laser radiation can become sources of dangerous gases • Laser beams can cause direct harm to humans
MUST-DO	The location of the equipment must be equipped with fire extinguishing equipment. It is forbidden to store flammable and explosive substances near the device.
MUST-DO	The user must ensure that the material to be processed is suitable for laser processing in order to avoid risks to the life and operation of the equipment.
FORBIDDER	The operator must not leave the equipment unattended while it is in operation. The equipment must be turned off at the end of operation.
	The use of highly reflective materials is prohibited to avoid the reflection of the laser beam on a person.
	The equipment must be located in a dry, uncontaminated place. The temperature inside the room should be 10-40 °C. Humidity should be in the range of 5-70% (provided there is no condensation).
	The equipment operates from an alternating power supply of 220 / 380 V with a frequency of 50 / 60 Hz. It is forbidden to use the equipment without a voltage stabilizer.

Attention!

The seller is not responsible for the improper use of the equipment and if the user fails to take precautions.

Contents

Specifications 8

Chapter 1. Prelude 9

1.1 Main purpose and scope of the equipment 9

1.2 Key Features and Benefits 9

1.3 Basic requirements for operation 9

1.4 Impact on the environment and people 10

Chapter 2. Safety Information 10

2.1 Overview 10

2.2 Ensuring the safety of working with equipment 10

2.3 Laser Safety Warning 10

2.3.1 Eye and skin protection 10

2.3.2 Fire protection 10

2.3.3 Secondary radiation hazards 11

2.3.4 Smoke poisoning hazards 11

2.4 Electrical safety 12

2.5 Obligations of the Operator 12

2.6 Processing materials 12

Chapter 3. Component Inspection and Installation 13

3.1 Equipment 13

3.2 Installation 13

3.3 Requirements for the premises 13

Chapter 4. Equipment design 15

4.1 Appearance 15

4.2 Machine Dimensions 16

4.3 Main Machine Components 18

4.3.1 Laser Source 18

4.3.2 Machine Tool Laser Head 19

4.3.3 Chiller 20

Chapter 5. Machine setup 21

5.1 Connecting the Auxiliary Gas 21

5.2 Compressed Air Connection 22

5.3 Chiller Installation 22

5.4 Installing the voltage stabilizer and connecting the machine. 23

5.5 Installing the Laser Head. 23

5.5.1 Connecting the Fiber Optic Cable to the Laser Head. 23

5.5.2 Beam alignment (Alignment). 24

Chapter 6. Start-up and operation 25
6.1 Launch Sequence 25
6.2 Machine Shutdown Procedure 25
6.3 Software Procedure 26
6.4 Nozzle function and adjustment. 26
6.4.1 Nozzle Function 26
6.4.2 Adjusting the laser and nozzle. 26
6.4.3 Nozzle diameter selection. 26
6.5 Laser Cutting Speed Selection 27
6.5.1 Determination of the optimal cutting speed. 27
6.5.2 Effect of Too Low Speed on Cut Quality 28
6.6 Selection of Gas and Its Pressure for Laser Cutting 28
6.6.1 Effects of Cutting Gas and Pressure on Cutting Quality 28
6.6.2 Effect of Pressure on Material Burning 28
6.6.3 Effect of Laser Cutting Power on Cutting Quality 29
Chapter 7. Maintenance and troubleshooting 29
7.1 General rules 29
7.2 Maintenance of peripheral equipment 30
7.3 Cleaning and Maintaining the Optical System of the Machine 31
7.3.1 Optical system 31
7.3.2 Installation and replacement of the optical element 31
7.3.3 Replacement of the upper protective lens 32
7.3.4 Replacement of the lower protective lens 33
7.3.5 Steps for cleaning optical elements. 33
7.3.6 Storage of optical elements: 34
7.4 Machine conservation 34
7.5 Lubricating the Machine 34
Chapter 8. Transport, unloading and storage 35
8.1 Transporting the Machine 35
8.2 Machine Transportation and Delivery Features 35
Chapter 9. Possible malfunctions and ways to eliminate them 36
Chapter 10. Warranty 37

SPECIFICATIONS

Model	1313 A		1530 A
Working Field, mm	1300x1300		1500x3000
Dimensions Without Packaging, mm	3115x2875x1723		4770x2900x1723
Laser Type	Ytterbium Fiber		
Laser Source Model	Raycus RFL-C1500S-CE	Raycus RFL-C2000S-CE	Raycus RFL-C3000S-CE
Laser Power, W	1500	2000	3000
Connector Type	QBH		
Laser Wavelength, Nm	1080+-5		
Power Adjustment Range (%)	10~100		
Max. Modulation Frequency (Hz)	1-5000		
Laser Head Model	Raytools Bm110		
Focusing System	Automatic		
XY Axis Structure	Hiwin 25 Rails		
Structure Of Z Axes	Hiwin 15 Rails		
Engine On XYZ Axes	Servo DELTA Y - 750W x 2, X - 750W, Z - 400W		
XY Gearboxes	TVB090-L1-05-S2-P2 PLANETARY REDUCER 1:5		
Control System	Raytools XC3000S		
Supported File Formats	DXF, AI		
Lubrication system	Automatic centralized		
Supply Voltage, V	380		
Supply Voltage Frequency, Hz	50		
Cooling Method	Water		
Coolant Temperature (°C)	22±1		
Maximum Fluid Pressure In Cooling System (Mpa)	0.5		
Ambient Temperature Range (°C)	+10...+40		
Ambient Humidity Value (%)	<70		
Gas Pressure For Cutting In The System (Mpa)	2,5		
Cooling Pressure In The System (Mpa)	5		

CHAPTER 1. PRELUDE

1.1 MAIN PURPOSE AND SCOPE OF THE EQUIPMENT

Laser cutting is the most advanced method of processing materials.

The machine is equipped with a high-power fiber-optic laser source, high-precision transmission mechanisms, as well as a high-quality laser head and user-friendly interface.
The laser machine is designed for cutting and marking metal materials, including:

- Carbon steel
- Stainless steel
- Aluminium
- Copper
- Brass
- Alloys and other metals

The machine is used in industry, mechanical engineering, furniture production, as well as for the manufacture of high-precision parts.

1.2 KEY FEATURES AND BENEFITS

- **Fiber Laser Source (1.5-3.0kW):** High cutting speed for different metal thicknesses. Stable performance and long service life.
- **Raytools XC3000S control system:** Intuitive interface, easy programming. Support for popular formats (DXF, G-code). Automation and remote monitoring capabilities.
- **Raytools BM110 Laser Head:** Automatic Focal Length Adjustment. High Temperature and Dust Resistant. High Cutting Precision and Stable Beam Quality.
- **Cooling System:** Water chiller to keep the laser temperature stable.
- **Durable Frame:** Reduces vibrations for stable and accurate operation.
- **Exhaust System:** Efficient fume and gas extraction for safe operation.
- **Energy saving:** A fiber laser consumes less energy than its gas counterparts.

1.3 BASIC REQUIREMENTS FOR OPERATION

1. Connected Ground: Ground resistance <5 Ω.
2. Voltage Stabilizer: A mains voltage stabilizer is required to stabilize the voltage of the machine and all associated devices.
3. Good ventilation is required to prevent dust accumulation and corrosion.
4. Installation of the equipment is possible without the use of a pillow, since there will be no strong vibrations during operation.
5. The chiller is used to cool the laser source and the laser head. It is a specialized piece of equipment that cools circulating water and requires the use of distilled water only.
6. To prevent fire, the workplace must be equipped with a suitable fire extinguisher.
7. The left and rear parts of the machine should be at a distance of more than 1.2 m from the wall. There should be a distance of at least 1 meter from the laser source to the walls.
8. The control box, servo, display and control panel are the main parts of the machine. They have certain requirements for the environment and must be protected from mechanical effects and electromagnetic interference.

1.4 IMPACT ON THE ENVIRONMENT AND PEOPLE

The laser machine belongs to the IV class of laser equipment. Its laser beam and reflected light can cause damage to the human body (especially the eyes). The operator and operating personnel should pay attention to eye protection and use special glasses (models SD-4 with a wavelength range of 1080 nm).

CHAPTER 2. SAFETY INFORMATION

2.1 OVERVIEW

Before operating the machine and performing daily maintenance, the operator should read this chapter carefully, learn the safety precautions and requirements of the machine, and follow the appropriate precautions.

2.2 ENSURING THE SAFETY OF WORKING WITH EQUIPMENT

1) It is necessary to appoint an industrial safety specialist for the operation of the equipment, determine the scope of his responsibilities and provide safety training for the machine operator.

2) Specify the machine location area, set a warning card for entering and exiting the machine area, specifying: machine power, type of laser source, type of eye protection used, full name of the industrial safety specialist, etc.

3) The machine operator must receive special training.

2.3 LASER SAFETY WARNING

Never point the laser beam at people or animals. High-power laser radiation can cause serious burns or damage to vision. Always keep an eye on the direction of the beam and control its movement.

2.3.1 EYE AND SKIN PROTECTION

Laser radiation can damage the retina of the eye. The laser can cause cataracts of the eye and skin burns. Therefore, appropriate protective measures are applied when adjusting the laser. This machine is equipped with a laser source, therefore, it is necessary to wear special safety glasses (with radiation protection with a wavelength range of 1080 nm).

A combination of face shields, masks, filters, and/or goggles will provide better protection while the equipment is running. All personnel working near the laser treatment area are advised to wear PPE.

Parts can be very hot even after the machining process is complete. Take steps to prevent skin damage by wearing protective clothing such as flame-retardant gloves, caps, leather apron, and other flame retardant clothing.

2.3.2 FIRE PROTECTION

Sparks during operation can easily cause a fire. Therefore, there should be no flammable and explosive objects in the working area of the machine.

Fire extinguishers should be nearby and accessible, and staff should be trained in their use.

2.3.3 SECONDARY RADIATION HAZARDS

During engraving and cutting, both visible and invisible light radiation is generated. The interaction between high-power laser light and the materials being welded can create plasma, which produces UV radiation and "blue light," which can cause conjunctivitis, photochemical damage to the retina, and/or a sunburn-like skin reaction. Even short-term exposure to invisible ultraviolet light during laser operation can cause blurred vision, burning, watery eyes, eye pain, and irritation (a feeling of sand in the eye).

To avoid the effects of radiation, it is necessary to work with the lid closed.

2.3.4 SMOKE POISONING HAZARDS

The smoke emitted from the material during laser treatment can consist of very small particles and gases, the smoke and gas are formed from a mixture of fumes of the material being treated, paints, coatings, taking into account chemical reactions and air pollutants. Smoke can negatively affect the lungs, heart, kidneys and central nervous system.

When the laser interacts with materials such as plastics, metals, composites, the material can start to evaporate. Often the fumes and mist are not visible, but they are highly toxic and pose a serious health risk.

Handling material in a poorly ventilated confined space is extremely dangerous. Dangerous concentrations of toxic fumes and gases can build up very quickly, causing loss of consciousness or death by suffocation.

Always work in an area with adequate ventilation. Use a fume extraction system to remove vapours, particles, and hazardous debris from the machine operating area.

Keep your head away from smoke while working. In confined spaces and other circumstances, a respirator may also be required.

Read and follow the safety guidelines and warning labels for all materials used.

Regular air monitoring should be carried out to determine the levels of hazardous vapours in the area of operation.

2.4 ELECTRICAL SAFETY

1) Make sure the installation is properly grounded.
2) Make sure the correct AC supply voltage is used before applying power to the unit. Using the wrong voltage may damage the installation.
3) Never use the device in a humid or wet environment. Do not touch electrical contacts and switches with wet hands to avoid electric shock.
4) Do not open the electrical cabinet or change the machine parameters without consulting the manual. If you need to change something, then these changes must be approved with the equipment supplier. Before modifying, record the original values so that the machine can be restored to its original parameters if necessary.
5) Always turn off the device when not in use. Never leave the laser machine running unattended.

After turning off the power to the machine, you must wait at least 5 minutes, and only then you can touch the electrical circuit of the machine. For a period of time after the power is turned off, there may be a high voltage in the machine's electrical system, which can cause harm to people and equipment.

2.5 OBLIGATIONS OF THE OPERATOR

- The operator must undergo special training in order to start working on the machine.
- Follow the instructions for regular maintenance of the appliance to keep it operational and prevent accidents.
- Monitor the temperature of the laser source and electronics through the control system.
- In the event of an emergency, stop the machine immediately using the emergency shutdown button.

It is forbidden to work on faulty equipment. If a fault is detected, turn off the equipment and unplug it. Inform the specialists. Do not repair the equipment yourself.

2.6 PROCESSING MATERIALS

- Before processing, the operator must ensure that the material is suitable for processing.
- It is forbidden to process materials with a high reflectance in the IR spectrum.
- Before handling materials, the operator must check whether harmful substances can be generated during their processing and whether your extraction (filtering) peripheral equipment is suitable for this type of material.
- When working with materials that emit caustic substances, it is necessary to use respiratory protection to avoid poisoning.
- After cutting, the machined parts may have sharp edges. Use protective gloves when removing them.

It is the responsibility of the user to take into account national and regional thresholds for dust, mist and gases when selecting filters and exhaust systems.

CHAPTER 3. COMPONENT INSPECTION AND INSTALLATION

3.1 EQUIPMENT

	Keep the packaging box. You will need it in case of return. Dispose of all waste in accordance with current waste disposal legislation.

1) After opening the package, check the complete set.

2) Check the equipment for damage in transit.

3.2 INSTALLATION

- The machine must be installed on a flat surface without bevels and slopes. It is necessary to leave free space on the sides of the machine from 1 m.
- The space around the machine should be freed up for quick and easy access to the panel and other machine components.

	Work only in a specially equipped room that meets safety requirements.

3.3 REQUIREMENTS FOR THE PREMISES

1. Ambient temperature

When operating the machine, the ambient temperature should be between +10 °C and +40 °C. When the equipment is switched off, the ambient temperature should not be lower than + 4 °C. If the ambient temperature is above 40 °C, a device that lowers the temperature (e.g. air conditioner) must be installed in the room.

2. Humidity

For the correct operation of the equipment, it is recommended to use it at a relative humidity of <70%. A wet room is not suitable for the operation of the machine, as it corrodes it, which leads to the failure of the electrical and mechanical systems of the machine

	It is forbidden to use the equipment at a relative humidity of more than 70%.
	Do not use the equipment at temperatures below the dew point.

Temperature	Humidity															
	20%	25%	30%	35%	40%	45%	50%	55%	60%	65%	70%	75%	80%	85%	90%	95%
16℃				0	2	4	5	7	8	9	10	11	12	13	14	15
18℃			1	3	4	6	8	9	11	12	13	14	15	16	17	18
21℃		1	3	5	7	9	11	12	13	14	16	17	18	18	19	21
27℃	2	5	8	10	12	13	16	17	18	19	21	22	23	24	25	26
29℃	4	7	10	12	14	16	18	19	21	22	23	24	26	27	28	28
32℃	7	10	12	15	17	19	21	22	23	25	26	27	28	29	31	31
35℃	9	12	15	17	19	21	23	24	26	27	29	30	31	32	33	34
38℃	11	14	17	20	22	24	26	27	29	30	31	33	34	35	36	37

3. Cooling of electrical components

Cooling of the equipment inside the cabinet is carried out by air circulation. Therefore, it is important that the parts inside the cabinet are not contaminated with dust and dirt.

CHAPTER 4. EQUIPMENT DESIGN

4.1 APPEARANCE

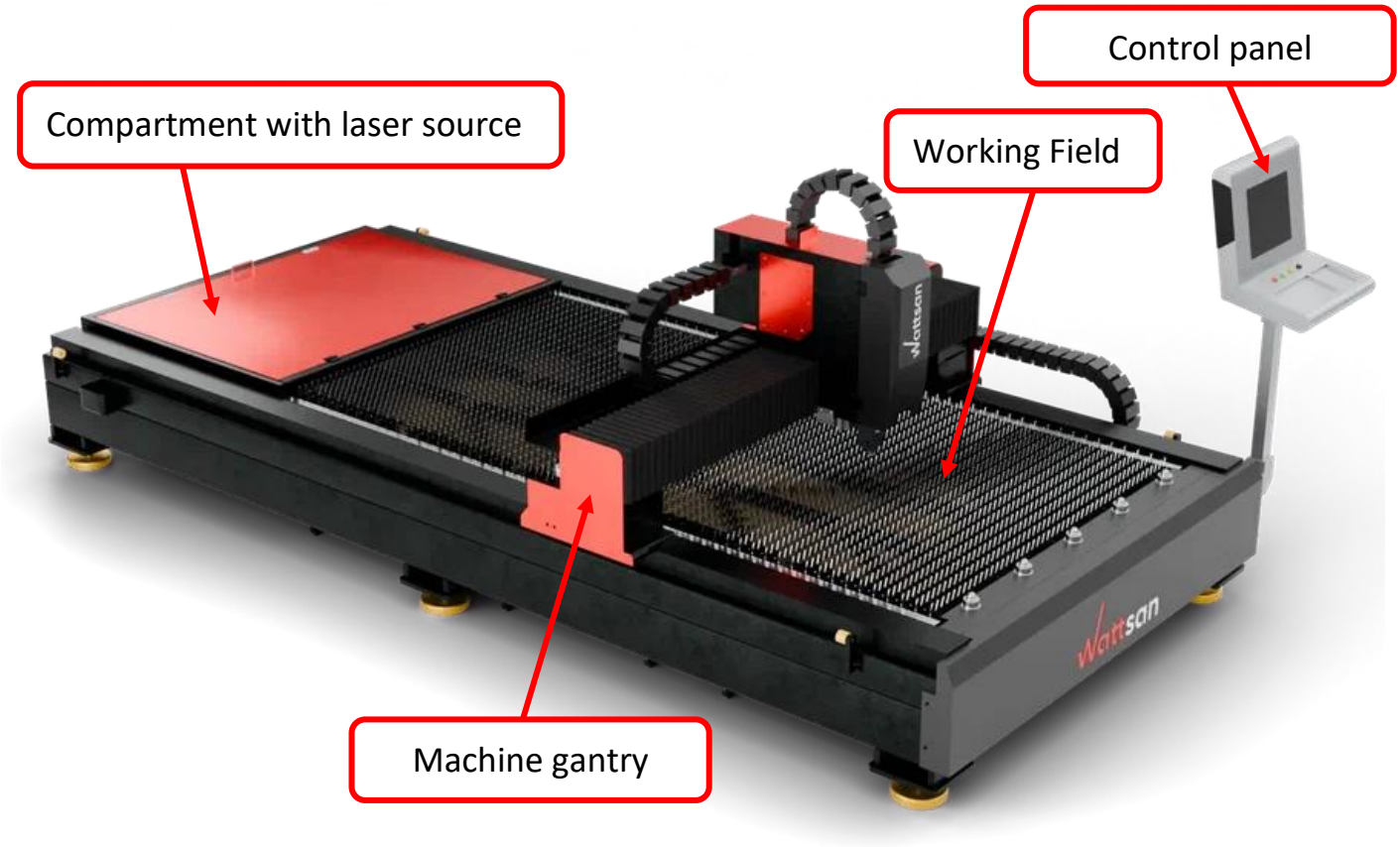

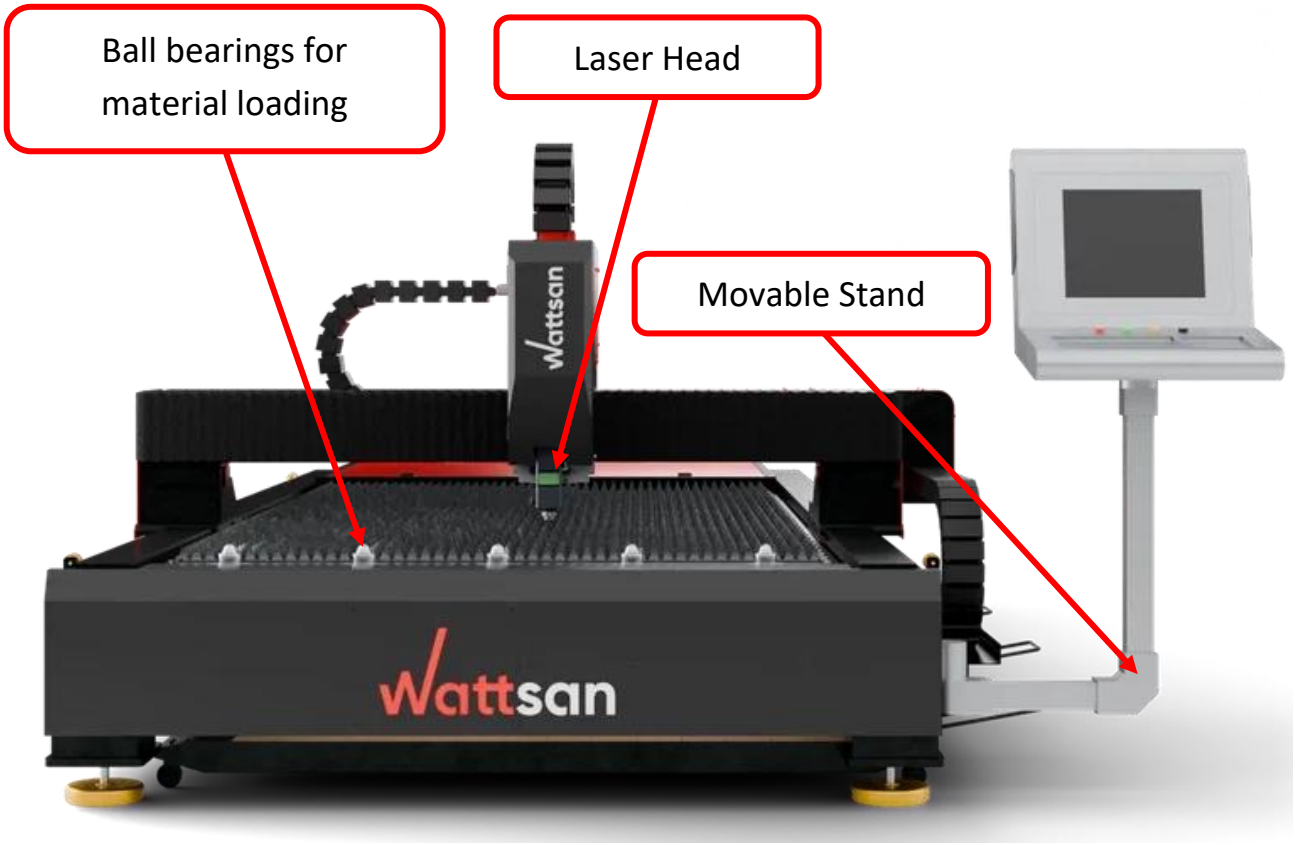

4.2 MACHINE DIMENSIONS

1530A

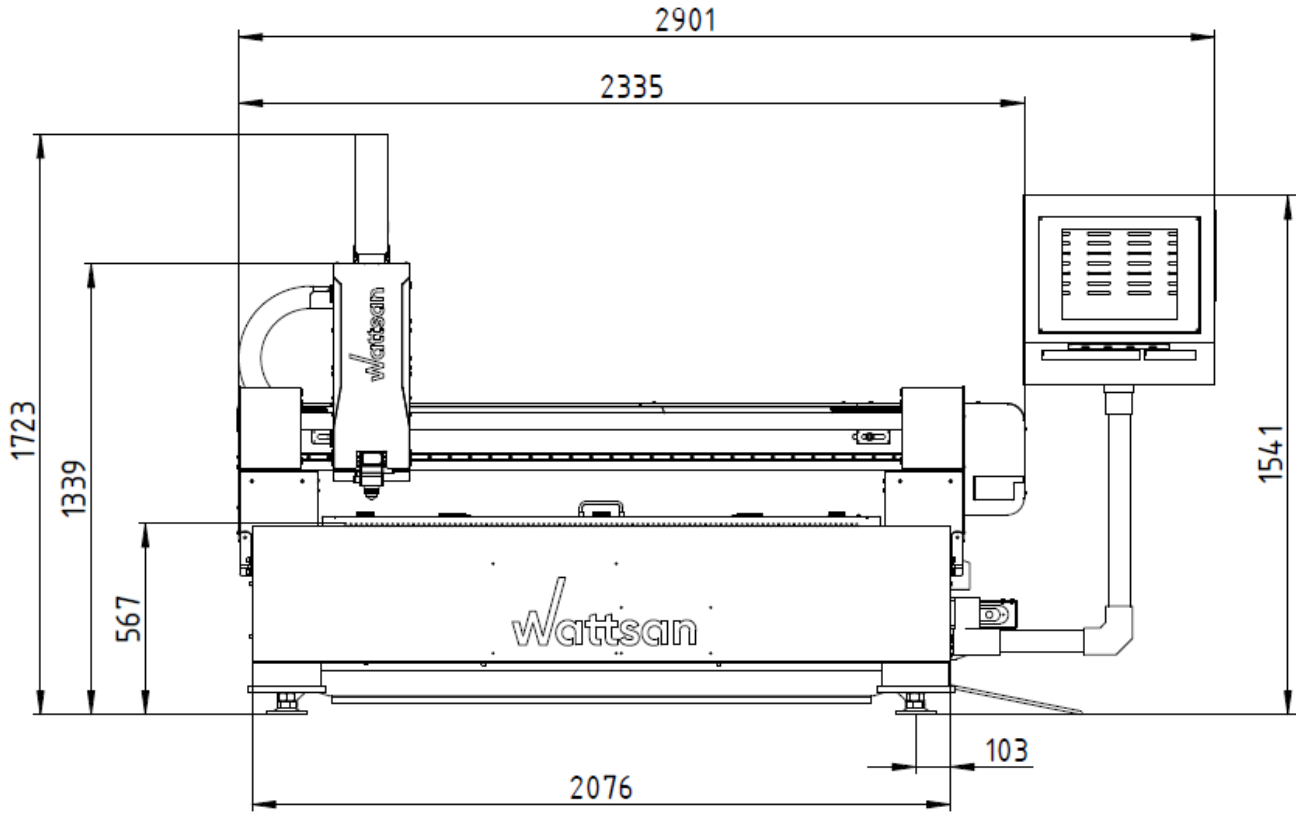

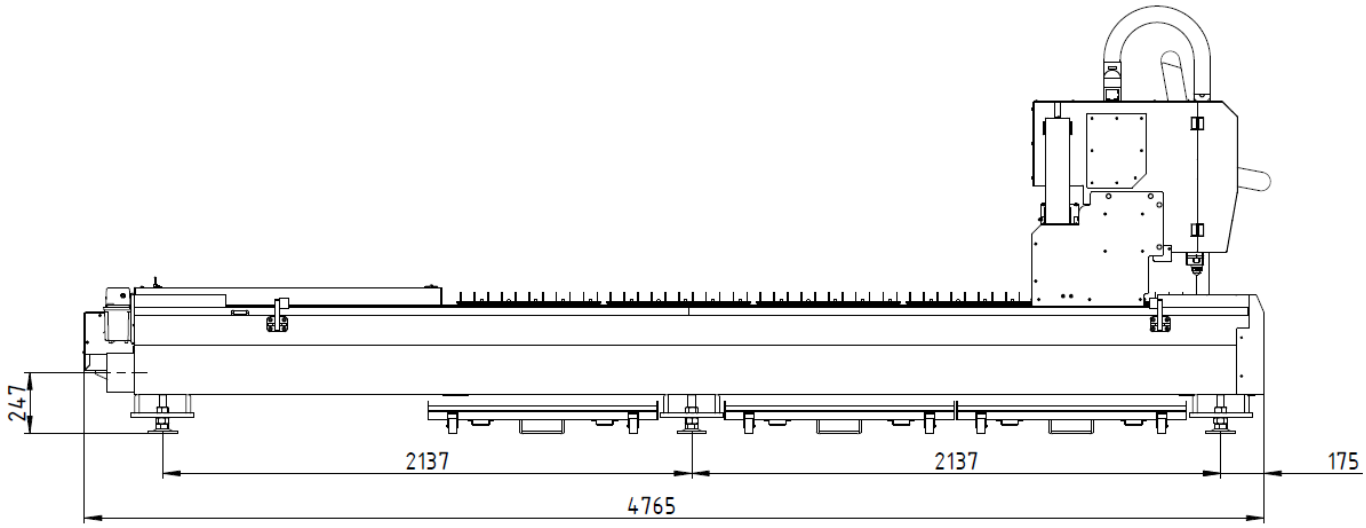

1313A

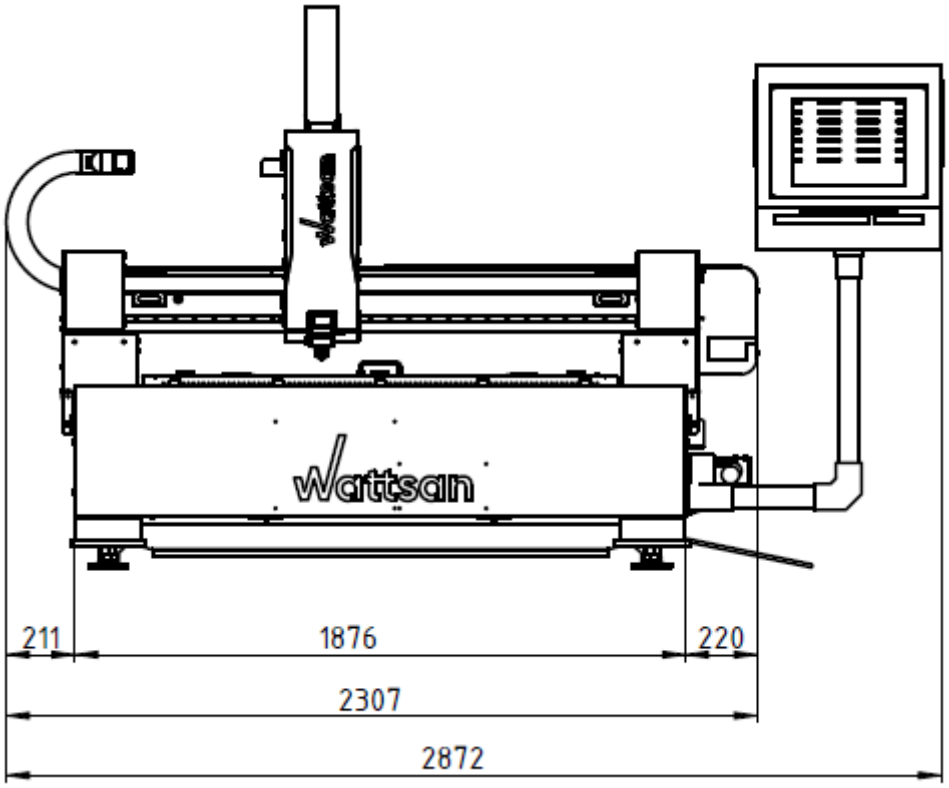

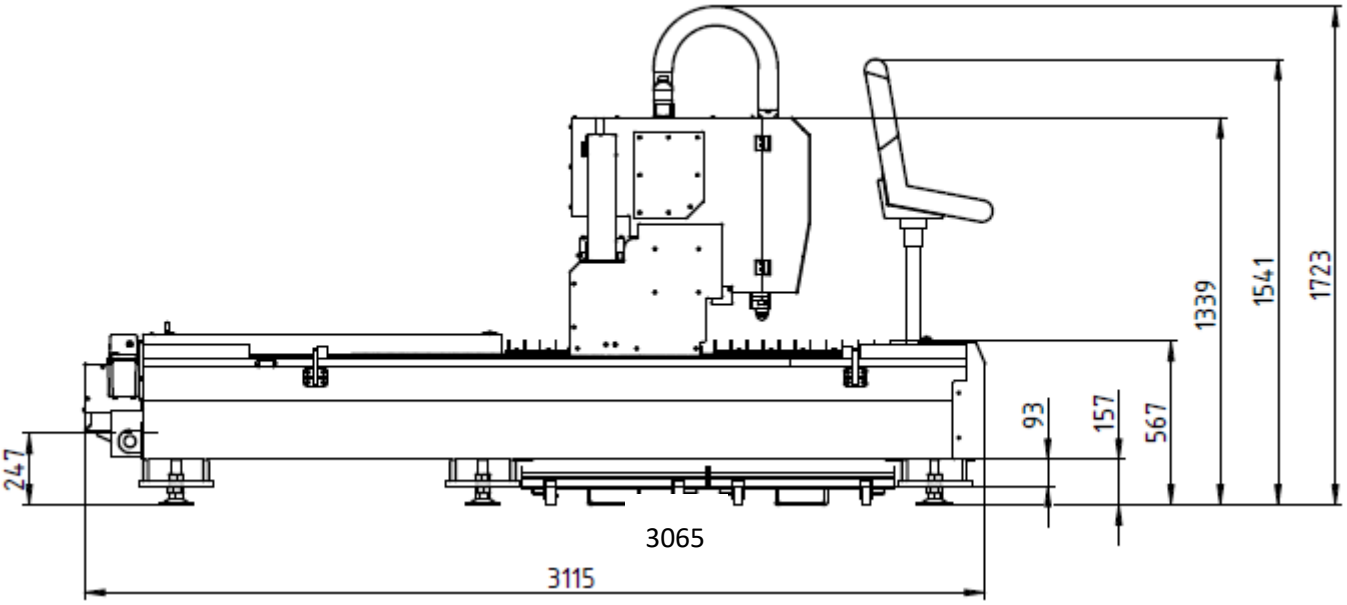

4.3 MAIN MACHINE COMPONENTS

4.3.1 LASER SOURCE

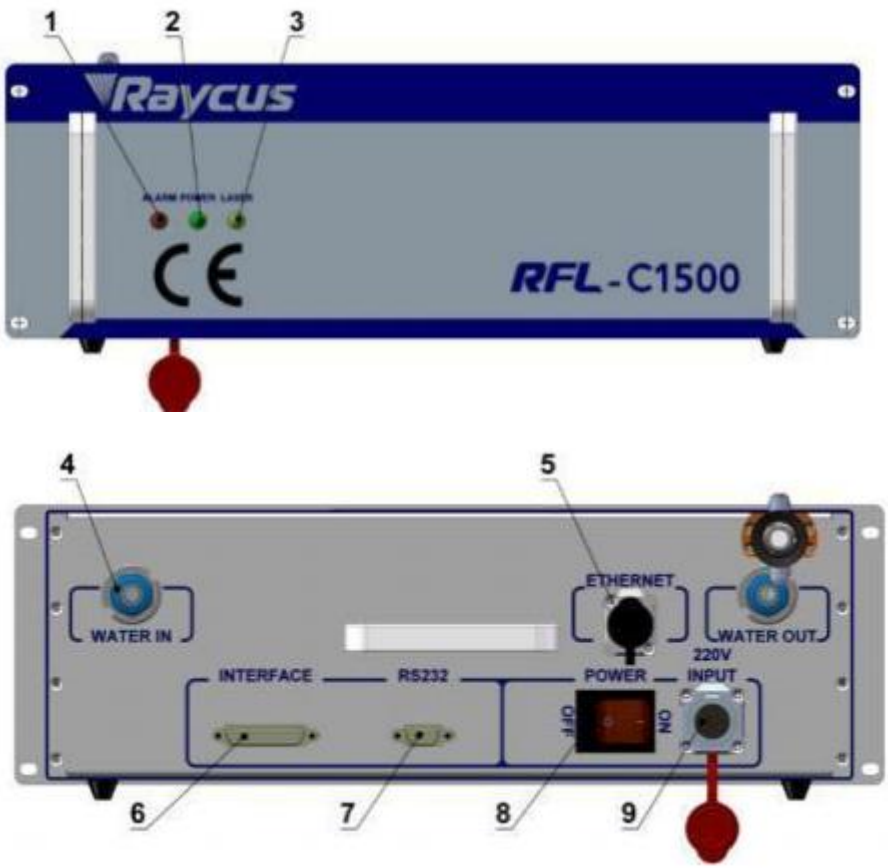

1. **Alarm:** Laser malfunction indicator.
2. **Laser:** Laser output indicator.
3. **Power:** The power indicator shows that the power is on when the LED is lit.
4. **Water pipe joint:** Quick release connector, insert a 12mm OD tubing into the circulating cooling water connector.
5. **ETHERNET:** Ethernet interface for communication between the laser and the upper computer.
6. **Interface:** The external interface of the laser control, see [4.4 Interface and Definition].
7. **RS232:** Serial interface 232 for communication between the laser and the control computer.
8. **Power:** Switch to turn on the main power supply to the laser.
9. **220V INPUT:** 220V power line input.

4.3.2 MACHINE TOOL LASER HEAD

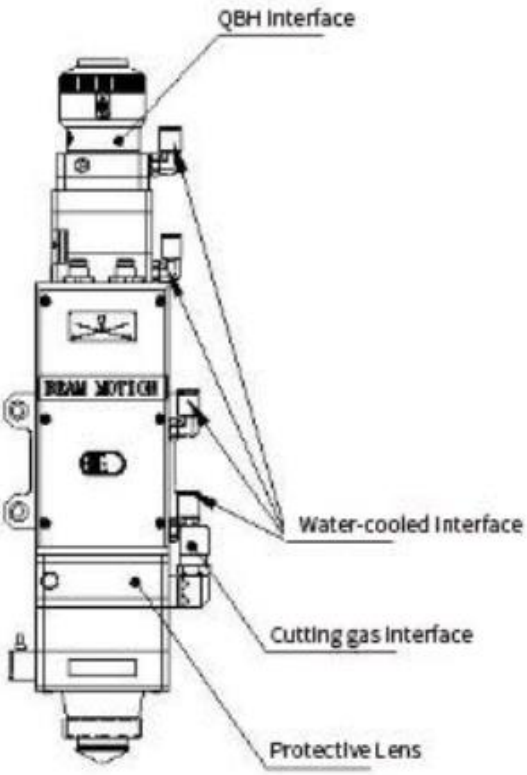

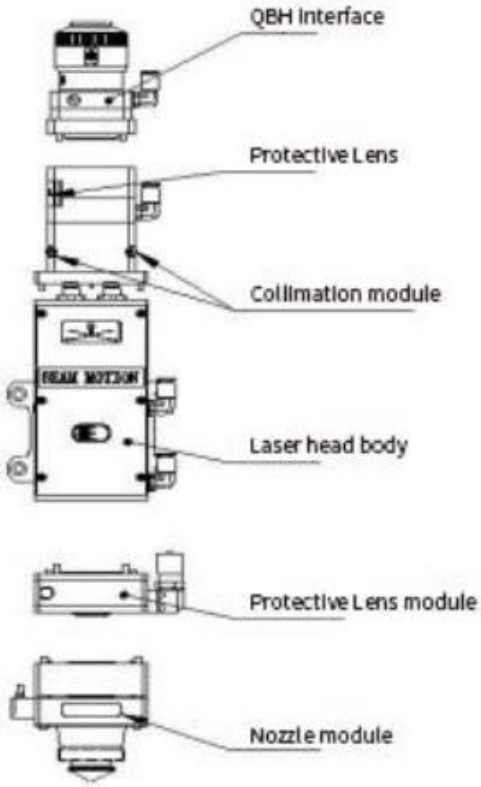

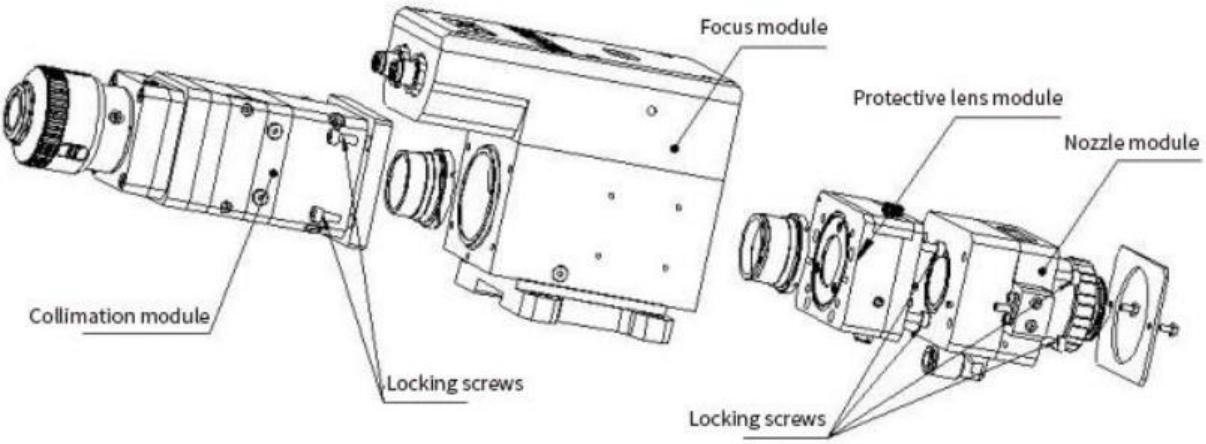

4.3.3 CHILLER

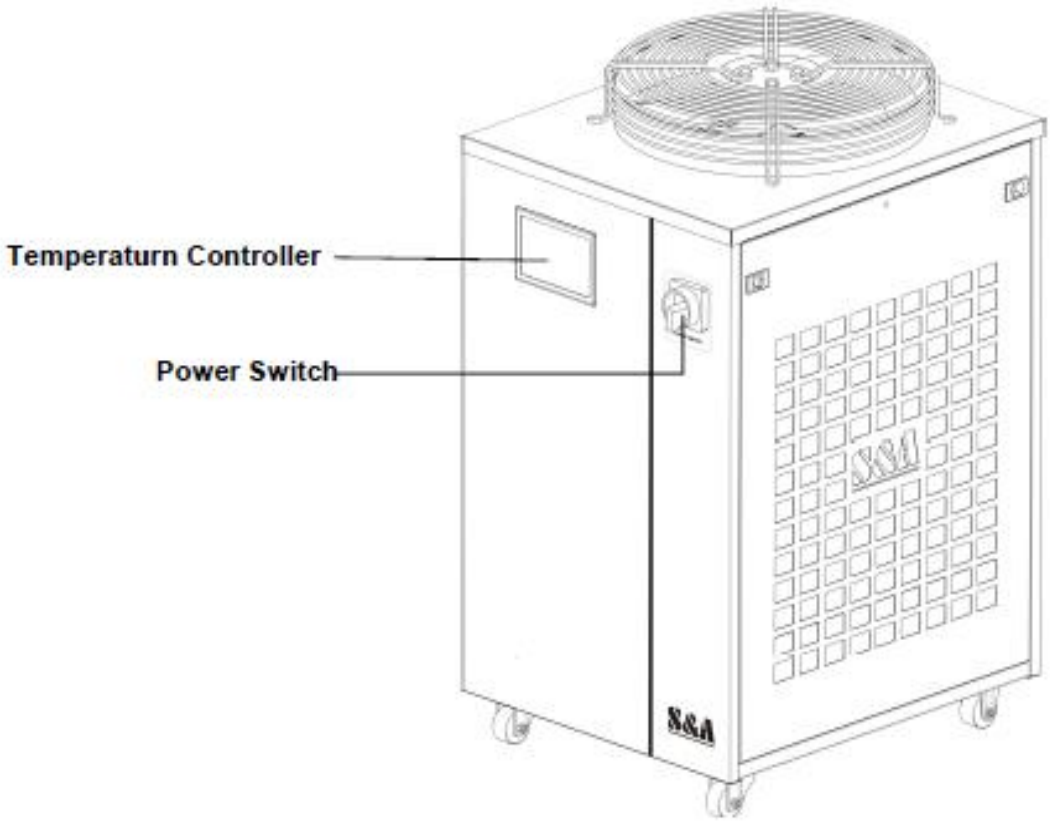

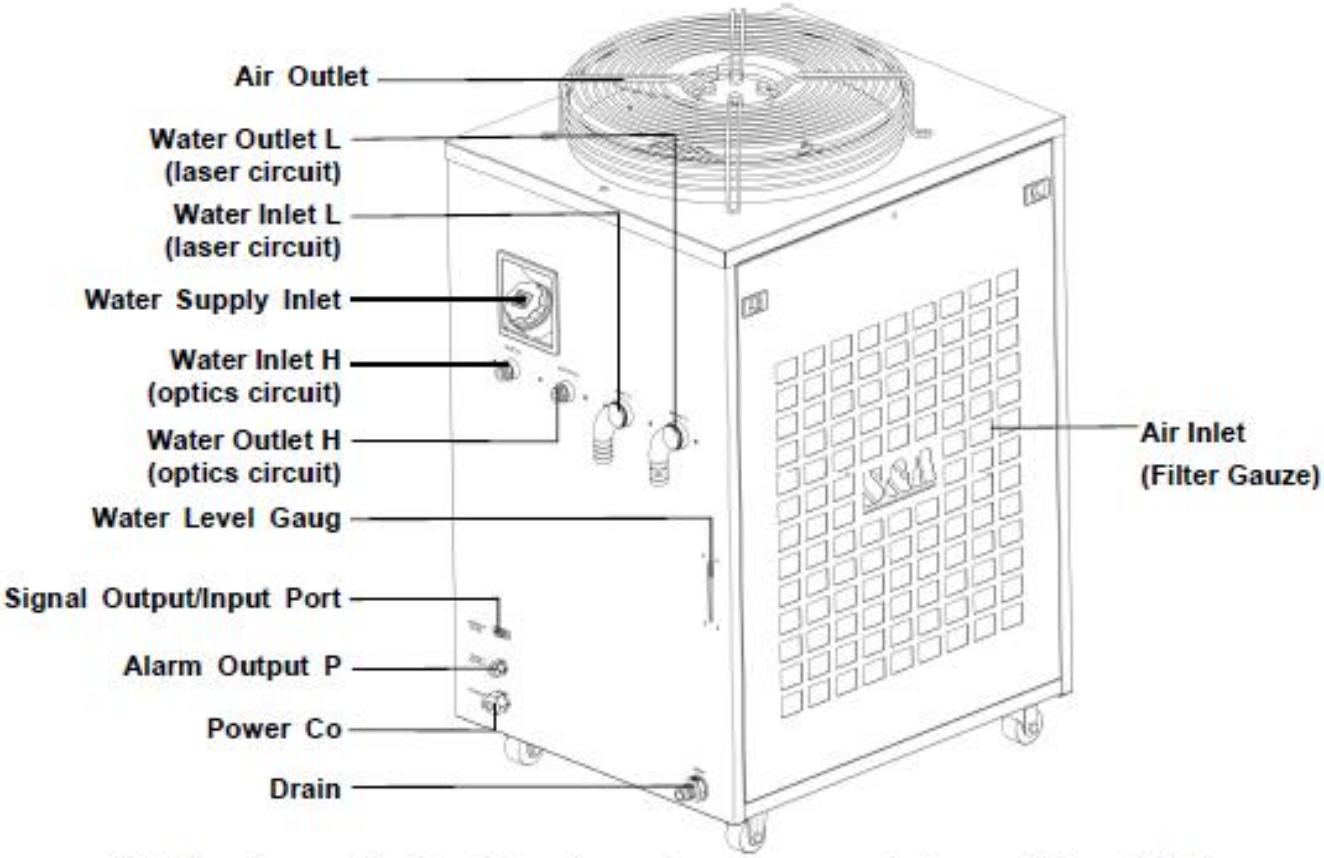

Note: The above-mentioned product outlines and part names are only for one of the models. The outlines and parts installation may be slightly different in different models.

CHAPTER 5. MACHINE SETUP

Adjustment of the machine should be carried out by a specialist and carried out strictly in accordance with the rules set out in this manual. Correct setup is the basis for ensuring the normal operation of the machine.

5.1 CONNECTING THE AUXILIARY GAS

1) Cutting Gas

Cleanliness requirements:

Gas	Purity	Application
A2	99.99%	Carbon steel
N2	99.999%	Stainless steel
Compressed air	99.999%	Carbon steel and less durable materials

2) The level of gas consumption is influenced by:

- Nozzle Diameter
- Gas pressure
- Laser Cutting Time

Cutting Gas Consumption Estimate: The following is a list of gas consumption when cutting at standard pressure and high pressure. To estimate gas consumption, use the machine to accumulate data and evaluate the determination of material varieties and material thickness.

Standard cutting: the nozzle outlet pressure is less than 6 bar. For cutting, oxygen or nitrogen is needed as a cutting gas. Using O2 for cutting under standard pressure conditions, the pressure will be at least 8 bar (with a gas flow rate of 10 Nm3/h, a nozzle diameter of Ø 1.7 mm and a cutting pressure of 6 bar).

High pressure: the nozzle outlet pressure is more than 6 bar. Nitrogen is used as a cutting gas, and oxygen can also be used.

Gas supply hoses must be located at a distance of at least 150 mm from the ground.

A shut-off valve should be installed on each hose so that you can stop the gas supply if necessary.

!	The temperature of the gas should not exceed **50** ℃.

3) Gas cylinder

The pressure reducer used in cylinders is the simplest way to supply gas, but requires a lot of manual work.

When replacing a gas cylinder, first check the label on the cylinder to ensure that it meets the requirements for laser cutting gas (e.g., N2 or O2 gas purity requirements and pressure requirements). The gas level cannot be lower than the recommended gas level. Next, connect the hoses to the equipment in the correct direction, open the cylinder of the connecting valve, check the gas path for damage to the hoses.

!	Do not use gas cylinders until the cylinder is completely depleted. The pressure in the cylinder used must be higher than atmospheric pressure.

Pressure: not less than 1.5 kgf/cm2, not more than 3 kgf/cm2.

The difference between the inlet and outlet water pressure: not less than 2kgf/cm2.

Valve and pipe: all stainless steel or high-pressure rubber hose, do not use galvanized material; clamp to connect stainless steel pipes.

5.2 COMPRESSED AIR CONNECTION

Connect the compressor to the air supply system in the machine. Before connecting, make sure that the hoses inside are not dirty and do not have foreign objects), and the hoses are not kinked throughout the laying route.

!	The air supply system must be equipped with a filter with a purification accuracy of 5 µm, a moisture and oil separator. Otherwise, the optics of the machine will quickly fail.

5.3 CHILLER INSTALLATION

	All the necessary information about the chiller, including its setup and error codes, can be obtained by scanning the QR code on the chiller body.

1. Chiller Inspection

Clean the chiller's water tank to make sure the water tank is clean and free of contaminants. Next, check the connection of the cooling hoses for breaks.

Make sure that the chiller is filled with refrigerant. Contact the supplier if necessary.

2. Hose connection

Next, check the connection of the hoses for the outlet and inlet of water to the laser head. Make sure that the hoses inside are not dirty and do not have foreign objects (debris and fastener parts), and the hoses are not kinked along the entire routing route.

3. Filling the coolant

!	Only distilled water is allowed to be filled into the chiller.

1) Remove the water filler cap.
2) Pour distilled water into the tank. Make sure that the water level is in the green zone on the indicator scale.
3) Place the lid on the neck.

4. Trial Run

- Check the tightness of the hoses and the compliance of the water pressure in the circuit with the required pressure for your equipment. If there is not enough cooling water in the tank, it should be added, also check that the chiller's water-cooling temperature limits meet the requirements of the equipment.
- When the water temperature reaches the set temperature, the chiller will start regulating the temperature automatically.

- After the water temperature in the cooling system and the water pressure difference reach the required value, the laser can be turned on.

	When working for a long time, always keep an eye on the level of cooling water. The water level should be checked in a timely manner and the hoses should be checked for leaks.

5. Water Purity Check

The presence of any opacity (e.g. suspension, filamentous, flaky, particles, etc.) indicates water contamination, so it is forbidden to use such water in the cooling system.

	When storing the equipment for a long time, at a temperature below freezing, it is necessary to drain the water from all hoses to avoid rupture.

5.4 INSTALLING THE VOLTAGE STABILIZER AND CONNECTING THE MACHINE.

To ensure the proper operation of your equipment, it and all peripherals must be connected through a voltage stabilizer.

1. The voltage stabilizer must be suitable in power for your equipment (including PC, chiller and other peripheral equipment).

2. Install and connect the voltage regulator to your power supply according to the instructions that came with it.

3. Don't forget to connect your gimbal to the ground.

4. Turn on the voltage regulator and check that it is working and converting the voltage correctly.

5. Connect the machine and peripheral equipment to the voltage stabilizer.

5.5 INSTALLING THE LASER HEAD.

The laser head is mounted on the plate through 4 bolt holes.

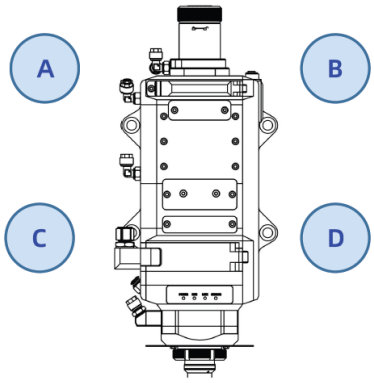

5.5.1 CONNECTING THE FIBER OPTIC CABLE TO THE LASER HEAD.

Sequence of operations:

1) Remove the connection block at the top of the plastic protective cover.

2) Insert the QBH connector.

Tighten the connecting nuts clockwise.
The bending radius of the fiber optic cable should be less than 200mm. The fiber optic cable must be routed through the flexible cable channels of the machine. Make sure that the water and gas pipes that are located next to the fiber optic cable do not leak!

Before connecting the fiber optic cable to the laser head, it is necessary to ensure that the QBH cable connector is clean, or clean it of dust using compressed dust blowing air or a professional cleaner (ethylene propylene glycol), as well as fiber cotton cleaning tools.

!	Fiber optic installation should be carried out by trained technicians.

You need to make sure that the QBH connector connector is not dirty, only then you can insert it into the hole of the laser head. After that, it is necessary to adjust (align) the optics of the laser head of the machine.

5.5.2 BEAM ALIGNMENT (ALIGNMENT).

It is performed by adjusting the collimation lens in the X-Y directions.

Use the adjustment screws located on the front of the laser head.

1. Make sure the laser beam is turned off.

2. Place adhesive tape under the nozzle.

3. Turn on a low-power laser pulse and evaluate the position of the laser beam relative to the nozzle by penetrating through the tape.

4. Adjust the alignment screws in the X/Y axes to center the laser beam relative to the nozzle.

The conditioned laser beam must be in the center of the nozzle.

Tape

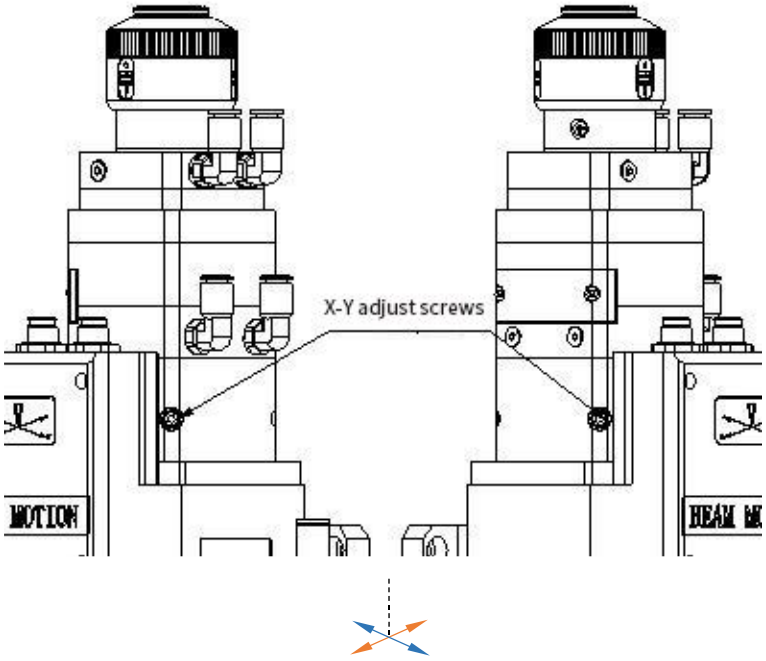

Relative position of laser beam

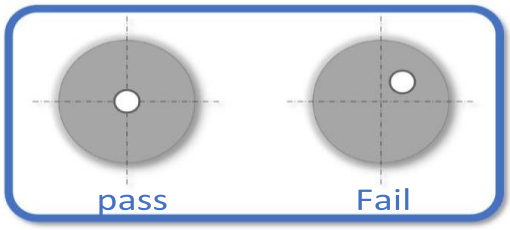

CHAPTER 6. START-UP AND OPERATION

6.1 LAUNCH SEQUENCE

1. Turn on the main switch in the control cabinet.
2. Start the chiller, check the water supply and there are no leaks.
3. Open the emergency stop button: turn clockwise.
4. Start the control system, the laser source on the green buttons.
5. Open the gas cylinder tap to the machine.

6.2 MACHINE SHUTDOWN PROCEDURE

1. Once the treatment is complete, turn off the gas supply from the gas cylinder. Blow all the gas out of the machine system. Move the laser head along the X and Y axes to the middle of the desktop.
2. Turn off the laser source.
3. Disconnect the power to the chiller.
4. Turn off the air compressor valve.

5. Turn off the external master switch.

6.3 SOFTWARE PROCEDURE

The procedure for working in the software can be found in the enclosed user manual.

6.4 NOZZLE FUNCTION AND ADJUSTMENT.

6.4.1 NOZZLE FUNCTION

The design and precision of the nozzle directly affects the cutting quality.

<u>The main functions of the nozzle are</u>:

1) Prevents melting and damage to the focusing lens and prevents cutting debris from entering the laser head.

2) The nozzle can control the size of the gas supply area and thus affect the cutting quality.

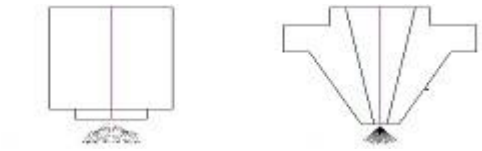

Without the nozzle *With the nozzle*

6.4.2 ADJUSTING THE LASER AND NOZZLE.

It is necessary to adjust the nozzle so that the laser beam passes strictly along its center:

1) Move the nozzle to the cutting height

2) Clean the surface of the nozzle. Then, put white adhesive tape on it.

3) Set the laser power to 20 watts – 30 watts. Run the laser light briefly. After the laser turns off, remove the tape from the nozzle. Check on the tape that the laser beam hits the center of the nozzle. If this is not the case, then it is necessary to adjust this with the adjustment bolts on the laser head.

	The center of the nozzle and its concentricity relative to the laser beam is one of the important factors that affect the quality of the cut, especially when cutting thick materials.

6.4.3 NOZZLE DIAMETER SELECTION.

Nozzle Diameter	Gas flow rate	Actual Cutting Ability
Small	Fast	High
Big	Slow	Low

Nozzle diameters are usually 1.5mm, 2.0mm, 2.5mm, 3.0mm, etc.

The difference is as follows:

1) For material up to 2 mm thick, a nozzle with a diameter of 1.2 mm is used, resulting in a thin cutting surface. When using a nozzle with a diameter of 1.5 mm, the cutting surface is thicker.

2) For material thicker than 2mm: Due to the high cutting power, it takes a long time for all parts of the laser head to cool down, which also increases the cutting time. With a nozzle with a diameter of 1.2 mm, the gas spread area is relatively small, resulting in low cutting efficiency. With a 1.5 mm nozzle, and a correspondingly larger gas distribution area, cutting is more efficient.

The larger the nozzle size, the lower the protection of the optical elements of the laser head of the machine, because sparks, combustion products and residues from the material to be cut can get into the laser head.

6.5 LASER CUTTING SPEED SELECTION

The choice of laser cutting speed is determined according to the material and its thickness. Different cutting speeds can have a big impact on the quality of the cut.

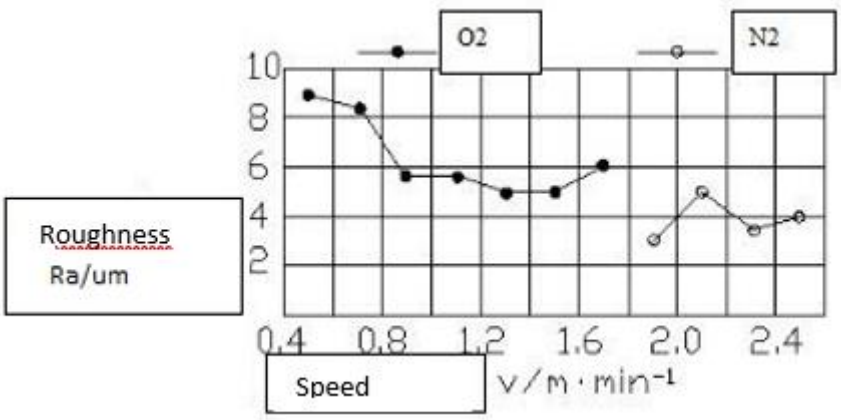

Dependence of Cut Roughness on Speed

6.5.1 DETERMINATION OF THE OPTIMAL CUTTING SPEED.

The cutting speed can be determined by the sparks, if the speed is too high, then the sparks will fly in different directions. If there are very few or no sparks, then the speed is too low. The suitable cutting speed is shown below in the figure: the cut surface should have a smooth line, and the bottom of the material will be slightly melted.

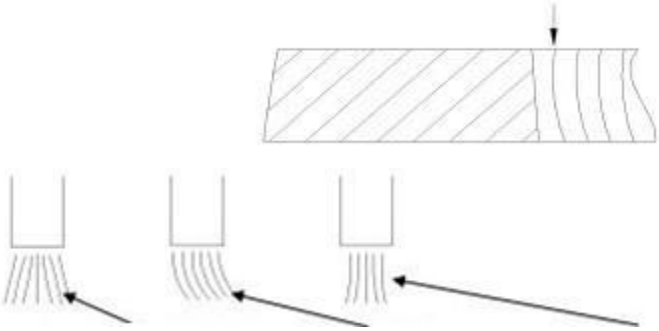

Normal speed *Too fast* *Too slow*

Effect of too high cutting speed on cut quality:

- It is possible that the material will not cut through or will not cut completely.
- The cut will be uneven and have traces of melting.

6.5.2 EFFECT OF TOO LOW SPEED ON CUT QUALITY

1) Melting of the upper part of the material, the edge of the cut will be coarser.

2) The cutting width of rounded or pointed elements will expand, this will lead to the fact that the entire area will melt and you will not get a perfect cutting result.

3) Slow cutting speed affects productivity

6.6 SELECTION OF GAS AND ITS PRESSURE FOR LASER CUTTING

Depending on the cutting material, a special gas must be used.

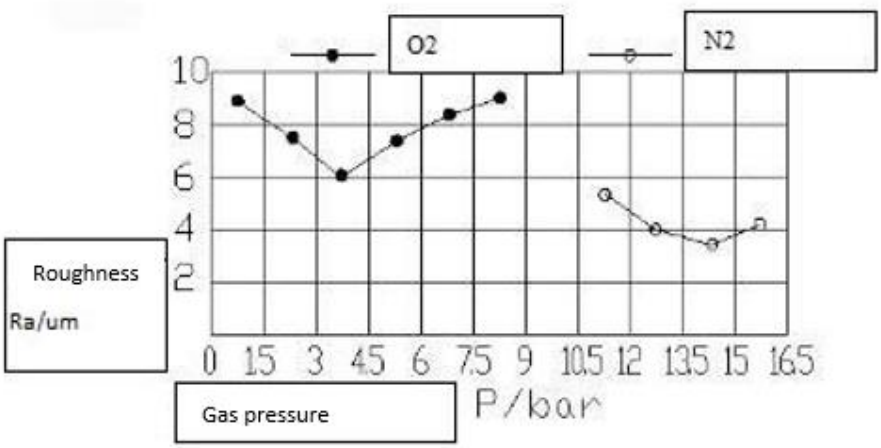

Dependence of the roughness of the cut on the gas used

The gas supply is necessary for combustion and heat dissipation, as well as for extruding molten metal during cutting and protecting against sparks from entering the nozzle protecting the focusing lens.

6.6.1 EFFECTS OF CUTTING GAS AND PRESSURE ON CUTTING QUALITY

1) The cutting gas helps to heat and melt the cutting material to get the best cut quality.

2) Due to insufficient gas pressure, the cutting quality may be reduced due to material melting and slow cutting speed, which greatly reduces the processing efficiency.

3) When the cutting gas pressure is too high, the impact on the cutting quality will be as follows:

4) The cutting surface will be rough and the cutting seam will be wide. At the same time, it can cause the material in the cutting area to melt, which will degrade the quality of the cut.

6.6.2 EFFECT OF PRESSURE ON MATERIAL BURNING

1) When the gas pressure is too low, it is difficult for the laser to cut through the material, the cutting time is longer, resulting in low productivity.

2) Too high a gas pressure causes melting at the penetration point, forming a larger melting point, which affects the quality of the cut.

3) When piercing the material, as a rule, high gas pressure is used.

4) When cutting ordinary carbon steel, the thicker the material, the lower the cutting gas pressure. And when cutting stainless steel, the pressure of the cutting gas increases relative to the thickness of the material.

5) The choice of gas pressure should be made according to the material and the specific application of the machine.

6.6.3 EFFECT OF LASER CUTTING POWER ON CUTTING QUALITY

The choice of laser power also affects the quality of the cut, the laser power can be determined according to the thickness of the material and the cutting speed. Too much or too little power does not allow you to get a good cut.

1) Too little power will not be able to cut through the material.

2) If the laser power is too high, the melting of the cutting surface will be too great, which will not give a good cut quality.

3) When the laser power is not enough, the machine will both cut and melt the material at the same time.

Therefore, setting the appropriate laser power at the appropriate gas pressure can ensure good cutting quality, without molten spots.

CHAPTER 7. MAINTENANCE AND TROUBLESHOOTING

In order to ensure the normal operation of the laser machine, it must undergo daily maintenance. Due to the fact that the machine uses components manufactured with high processing precision, maintenance must be carried out in strict accordance with the operating rules of each part of the machine so as not to damage its components.

7.1 GENERAL RULES

Use the most appropriate oils to lubricate machine tool systems. At the same time, you should pay attention to the following:

1) Before the initial commissioning of the machine (or after a long downtime), it is necessary to check the lubrication condition of all equipment.

2) Do not use woolen, fiber, woolen rags to lubricate the machine. Do not use kerosene and gasoline.

3) Do not mix synthetic and mineral lubricants.

7.2 MAINTENANCE OF PERIPHERAL EQUIPMENT

Only distilled water should be used in the chiller. The presence of problems with water quality can seriously affect the cutting effect and even the burn-in of optical elements. The presence of dust and debris in the chiller radiator can lead to a lack of effective cooling of the equipment, which will also directly affect the cutting effect. Thus, the daily maintenance of the chiller is especially important.

Maintenance period	Maintenance content	Purpose
Once a year	1. Check the water pressure in the chiller.	To prevent water leaks
	2. Clean the chiller body with soap and water (do not use gasoline, acids, metal brushes).	For long-term operation of the chiller
Once every 3 months	1. Replace the water in the chiller	To ensure the normal operation of the laser
Once a month	1. Check the cleanliness of the air filters, drain the condensate from the compressor.	For long-term operation of optics
	2. Check the chiller condenser for dirt or dust buildup. If necessary, blow it out.	To ensure the normal operation of the chiller
	3. Check that the water temperature in the chiller is set to 22 ± 1 ℃.	For normal cooling of equipment
	4. Check for breaks in the pipelines	Make sure there are no leaks
Once every 15 days	1. Wipe the control panel with a dry, clean cloth.	To ensure the cleanliness of the surface of electrical parts
	2. Clean the chiller air filter. Use a vacuum cleaner, air guns and brushes for this.	To ensure efficient water cooling
	3. Check the water quality.	Good water quality is essential for the normal operation of laser equipment

!	If an alarm comes on at the laser source, contact your equipment supplier immediately.

7.3 CLEANING AND MAINTAINING THE OPTICAL SYSTEM OF THE MACHINE

7.3.1 OPTICAL SYSTEM

- Focusing lenses, protective mirrors, and the optical surface of the QBH connector must not be touched. This optics are easy to scratch. If there is grease or dust on the optics, it will affect the efficiency of the equipment.
- It is strictly forbidden to wash the optical surface with water, detergents and other cleaning agents. The surface of the lenses is covered with a special layer, if you use standard optics cleaners, this will damage its surface.
- Do not store the optics in places with high humidity, this will cause the surface of the optics to age.

The surface of the optics must be clean. If it is stained with dust, dirt or water vapor, you can easily damage the coating of the lens.

!	If the optical element is damaged, it must be replaced as soon as possible, do not operate the machine with damaged optics.

7.3.2 INSTALLATION AND REPLACEMENT OF THE OPTICAL ELEMENT

- Before installing the optical element, wear clean clothes, wash your hands with soap and water, and wear clean white thin gloves. During any procedures, try not to touch the surface of the optical element.
- When assembling/disassembling the optical system, do not blow on the optical elements. When installing optical elements, make sure that the installation area is not dusty or dirty.
- When installing/replacing the optical element, do not apply too much pressure to it, as this may cause damage.

Be extremely careful when removing the optical element from the box in which it is stored. The optical element should be held only by its edges. Avoid dust on the optical element. After installing the optical element, blow it out with clean air from dust and other contaminants. If dirt or dust has accumulated on the optical element, it should be cleaned immediately.

7.3.3 REPLACEMENT OF THE UPPER PROTECTIVE LENS

1) Remove the 2 screws of the protective cover of the upper protective lens

2) Remove the protective cover of the protective lens;

3) Remove the cartridge from the protective lens:

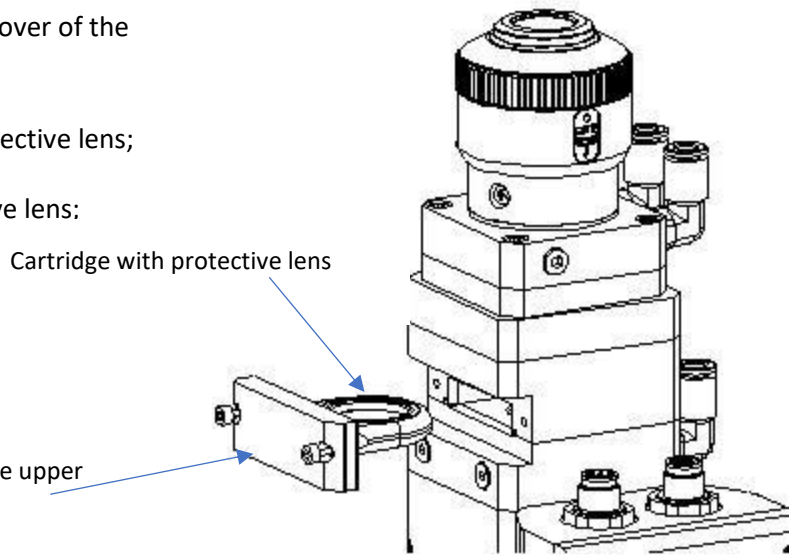

4) Cover the empty area of the protective lens with tape to prevent dust from entering;

5) Remove the pressure ring from the protective lens;

6) Replace the protective lens;

7) Install the pressure ring in the cartridge;

8) Insert the protective lens cartridge together with the lens into the laser head;

9) Install the protective cover and secure with 2 screws.

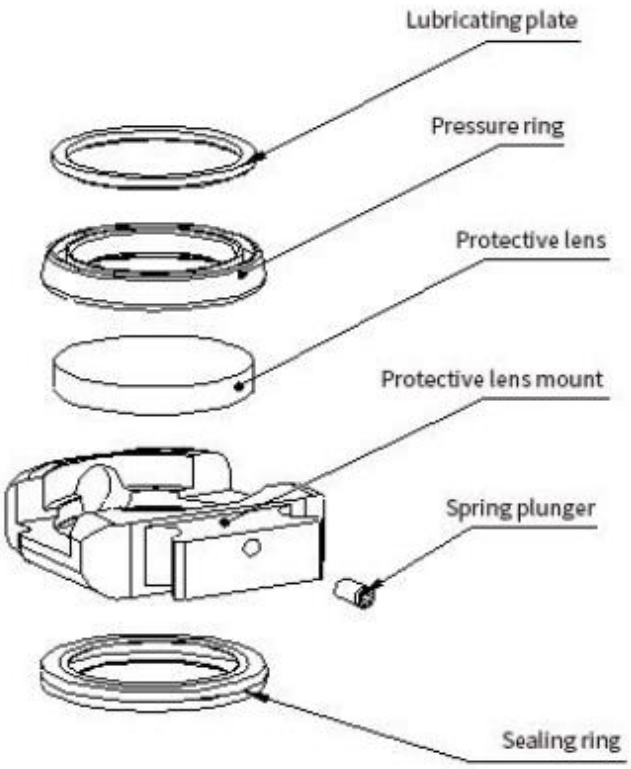

7.3.4 REPLACEMENT OF THE LOWER PROTECTIVE LENS

1) Remove the pressure screw to reveal the protective cover of the lower protective lens cartridge;
2) Remove the cartridge with the protective lens;
3) Close the cover of the lower protective lens to prevent dust from entering;
4) Remove the pressure ring from the protective lens;
5) Replace the protective lens;
6) Open the cover of the lower protective lens;
7) Insert the cartridge together with the lens into the cutting head;
8) Close the lid and secure with a clamping screw.

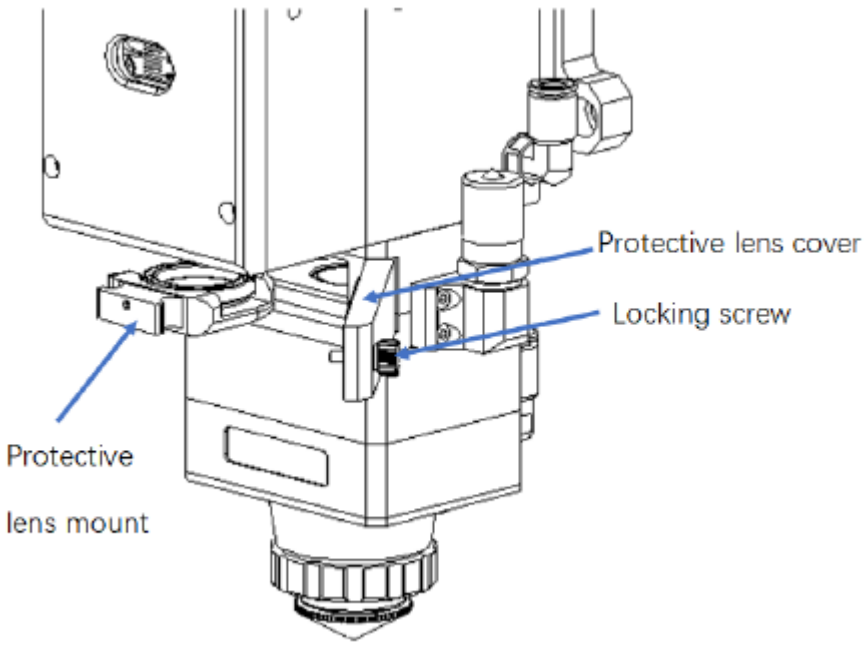

7.3.5 STEPS FOR CLEANING OPTICAL ELEMENTS.

!	Work on cleaning and replacing optical elements must be carried out in a clean room!
	Optical elements must not be rinsed with water or detergents.

There are different cleaning methods for different optical elements. If the surface of the optical element is flat and does not have a frame, then you can use special paper for cleaning the optics. If the surface of the optical element is curved or has a frame, and it is not possible to use special cleaning paper to clean it, then clean lint-free sticks should be used.

Cleaning methods:

1) Using special paper for cleaning optics.

Use clean air to blow the dust off the surface of the optical element. Use alcohol and special cleaning paper. Position the optical element horizontally on the special cleaning paper. Pour 2~3 drops of high-purity isopropyl alcohol or acetone onto the optical element and rub slowly, in the direction of the operator, with special cleaning paper on the surface of the optical element until the surface of the optical element is cleaned. Do not press the optical element and try not to scratch it. In no case rub dry on the surface of the optical element, use alcohol or acetone of high purity!

2) Using a special lint-free stick for cleaning optics.

Use clean air to blow the dust off the surface of the optical element. Pour 2~3 drops of high-purity isopropyl alcohol or acetone onto the optical element. Gently pinch the optical element around the edges. Wipe the surfaces of the optical element with a lint-free stick with one-way movements. Do not allow backward movements on the surface of the optical element! Do not use used wipes or lint-free sticks!

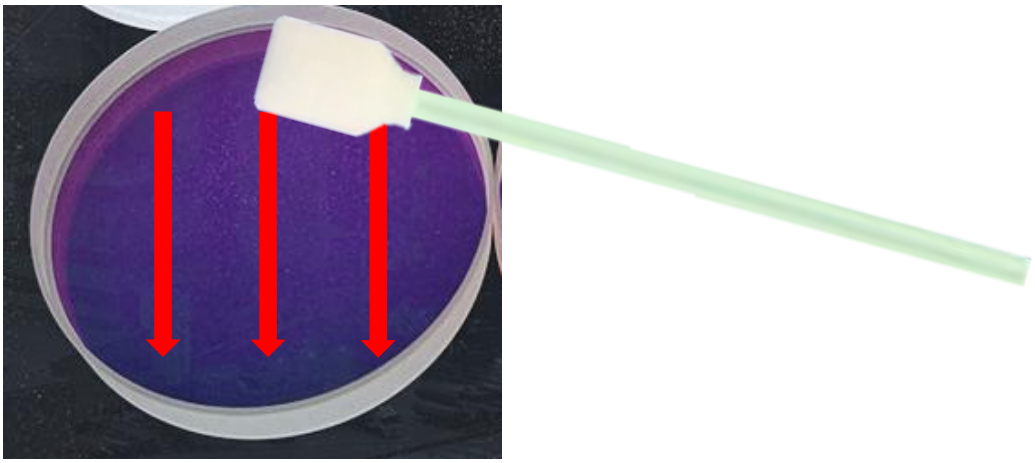

7.3.6 STORAGE OF OPTICAL ELEMENTS:

- The storage condition of the optical element affects its quality.
- The ambient temperature should be 10~40C. Do not freeze the optics!
- Optical elements must be stored in a separate box, must not be subject to vibration, otherwise they can be damaged.

7.4 MACHINE CONSERVATION

If you want to suspend the use of the machine for a long time, then it is necessary to carry out anti-corrosion treatment of all mechanical parts and components of the machine, cover them with impermeable bags.

7.5 LUBRICATING THE MACHINE

- Use WD-40 or equivalent to clean guide rails and mechanical transmissions.
- Use spray oil to lubricate guide rails and mechanical transmissions.
- Using a grease gun (R-301), fill the lithium base grease (MP-3) into the centralized lubrication system.

CHAPTER 8. TRANSPORT, UNLOADING AND STORAGE

8.1 TRANSPORTING THE MACHINE

- A hydraulic crane with a lifting capacity of at least 80 tons can be used to load the machine.
- If according to the situation, it is necessary to use a large boom, the truck crane should have a greater gravitational force.
- The lifting capacity of the forklift should be at least 2.5 tons.
- The lifting capacity of the overhead crane should be at least 10 tons.
- The machine can be transported at a height of at least 100 mm from the ground.

8.2 MACHINE TRANSPORTATION AND DELIVERY FEATURES

- When transporting the machine, it is necessary to avoid rain, moisture, strong inclinations, rodents, potholes on the roads. The ambient temperature should be in the range from -10 ℃ to + 40 ℃, relative humidity should not exceed 70%. It is forbidden to store the machine in the open air for a long time.
- Do not put other loads on the machine during transportation.
- When transporting the machine, do not use cables that are tied directly to the machine.
- The packaging of the machine should protect from moisture and sunlight.

CHAPTER 9. POSSIBLE MALFUNCTIONS AND WAYS TO ELIMINATE THEM

Defect	Decision
No Auxiliary Gas Outlet During Treatment	• Check the air pressure • Check the electrical circuit and solenoid valves
Abnormal noise when driving on an axis	• Add grease to the guides • Check the Movement Paths of the Moving Parts
Insufficient or missing laser power on the cutting head	• Check the optical system for contamination • Check if the CNC machine is properly connected to the laser source • Check the laser • Replace the nozzle • Adjust the optical path of the laser • Replace the gas with a cleaner one with the right pressure
Discrepancy between the cutting result and the drawing	• If damaged, replace the servo motor and servo

CHAPTER 10. WARRANTY

In case of equipment breakdown during its warranty period due to a defect caused by the manufacturer, repair is carried out by the supplier's company free of charge.

However, consumable parts such as optical parts (focusing lens, protective lens, reflective mirrors, etc.) are not eligible for warranty service.

For free repair or replacement of accessories, the buyer bears the cost of delivering new components from the place of their storage to the buyer's address, and, if necessary, the buyer bears the cost of the specialist's visit to the place of work.

If the equipment failure is caused by a defective part or assembly of the equipment, this part or assembly is repaired or replaced free of charge.

Defective components and parts must be returned to the supplier.

If the malfunction is not caused by the quality of parts or components of the equipment, the buyer will have to pay the cost of repair as well.

Warranty service is also not subject to malfunctions due to improper use of equipment, non-compliance with maintenance rules, operating conditions, as well as warnings specified in manuals and on warning plates that have arisen during the warranty period.

It is also a prerequisite that your equipment and peripheral devices are grounded and operated through a voltage stabilizer.