Shenzhen RelFar Intelligent Technology Co., Ltd.

FWH50-P10A Hand-held Pulse Cleaning Head

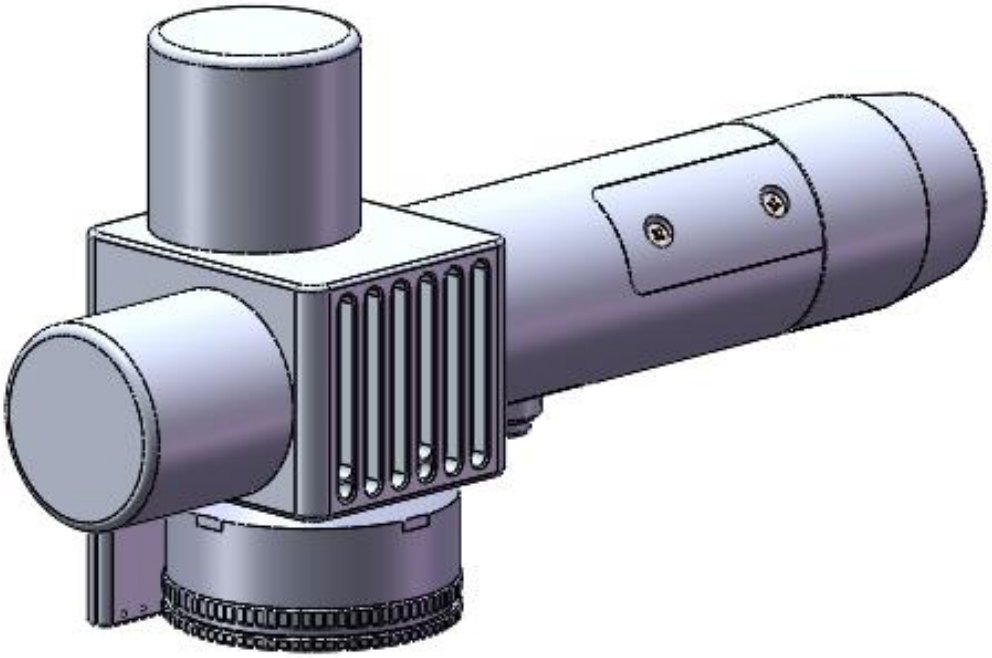

Shenzhen RelFar Intelligent Technology Co., Ltd.

Website: www.relfar.com

Tel.: 0755-23143635

Address: Factory, Area B, Haiweijingsong, Siyuan No.1 District, Qiaohe Road, Heping Community, Fuhai Sub-district, Bao'an

Foreword

Thank you for choosing our products!

To enable you to have an overall understanding of our company, there is a detailed introduction regarding features, structural features, technical parameters, instructions for use and maintenance of the product in the Manual. Before using this product, please read this Manual carefully, which will help you to use it better.

Due to constant update of product functions, the product you received may differ from the description in the Manual. We hereby express our deep sorry for this matter! During use, in case of any question, please timely call us for consultation, and we will offer dedicated service to you wholeheartedly.

Contents

Chapter I Overview 4
1.1 Product parameter 4
1.2 Precautions 4
Chapter II Structural Characteristics 6
2.1 Product structure 6
Chapter III Product Installation 7
3.1 Pipe connection 7
3.1.1 Cooling water 7
3.1.2 Maintained gas 8
3.2 Optical fiber input installation 9
3.3 Fixed-focus support module 11
3.4 Side-blown module 12
Chapter IV Maintenance 13
4.1 Structure of optics lens 14
4.2 Cleaning of optics lens 15
4.3 Disassembly and assembly of optics lens 17
4.3.1 Disassembly and assembly of protective glass 17
Chapter V Laser Cleaning System 18
5.1 Installation dimension drawing for product 18
5.1.1 Installation dimension of touch screen 18
5.1.2 Installation dimension of main board 18
Chapter VI Electrical 19
6.1 Bill of electrical materials 20
6.2 System wiring 21
6.3 Power interface 22
6.4 Laser interface 22
6.5 Galvanometer interface 23
6.6 Digital IO interface 24
6.7 HMI interface 26
Chapter VII Introduction to HMI Operation 27
7.1 Introduction to HMI function 27
7.2 Introduction to HMI operation 27
7.2.1 Main interface 27
7.2.2 System parameter 29
7.2.3 Advanced parameter 30
Chapter VIII Appendix 32
8.1 Description of linkage 32

Chapter I Overview

1.1 Product parameter

Name	Hand-held Pulse Cleaning Head
Model	FWH50-P10A
Fiber interface	QCS Ø17 (without isolator)
Wavelength scope	1070±20nm
Rated power	≤300W/pulse
Specification of field lens	F254mm
Scanning range	100mm length * 100 mm width
Scanning speed	≦30000mm/s
Auxiliary pressure	≤1Mpa
Effective clear aperture	Ø25
Cleaning type	- | □ ○
Weight	0.76Kg

1.2 Precautions

※ Before the laser is emitted, the black dust-proof cover of the field lens should be removed.

※ To ensure personal safety, wear the special fiber laser protective glasses before operation.

※ It is necessary to keep the product clean and prevent the cooling liquid, condensate water or other foreign matter from intruding into the cavity, or the functional contamination and functional impact of related parts will be incurred.

Chapter II Structural Characteristics

2.1 Product structure

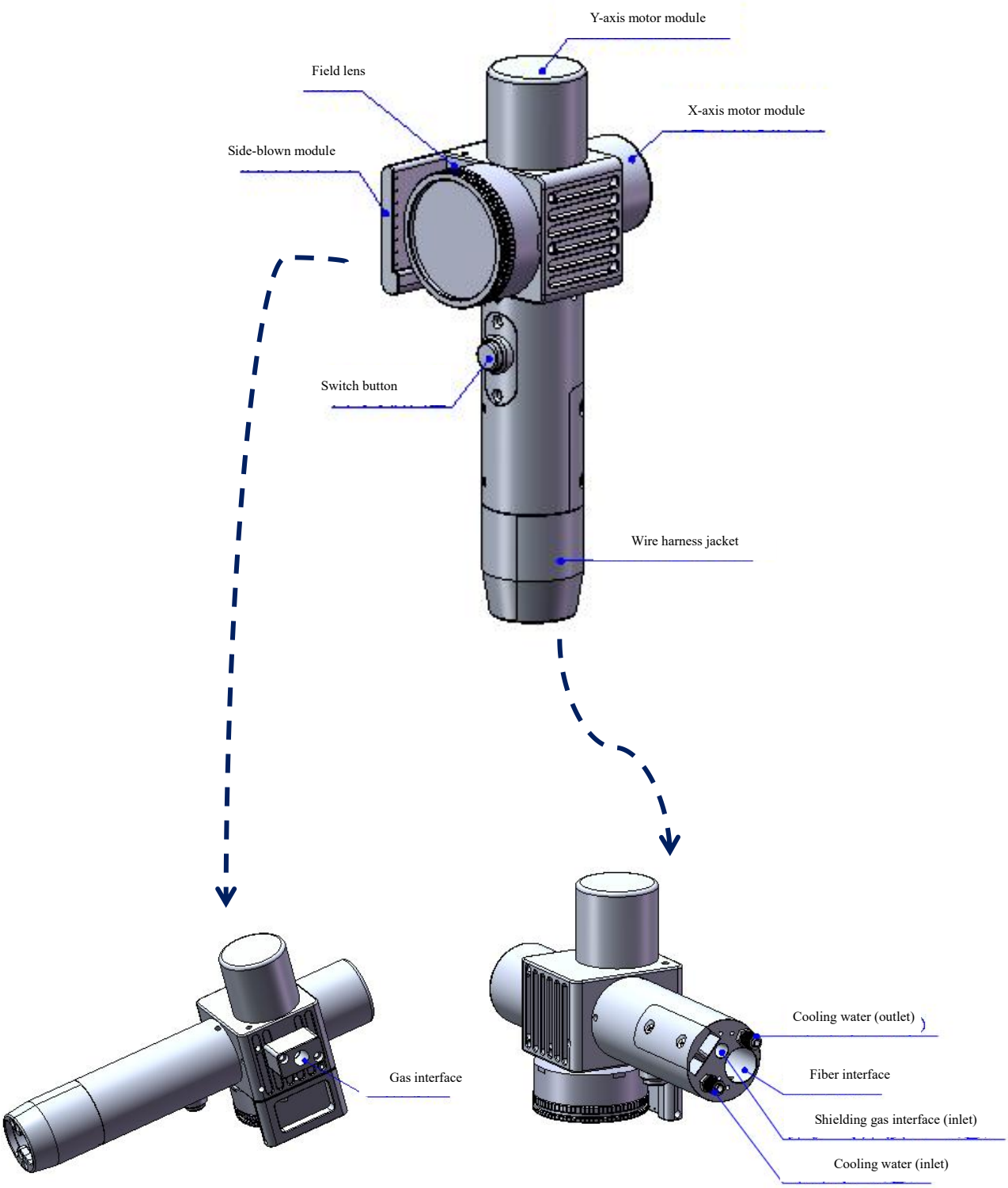

Chapter III Product Installation

3.1 Pipe connection

Shielding gas connection

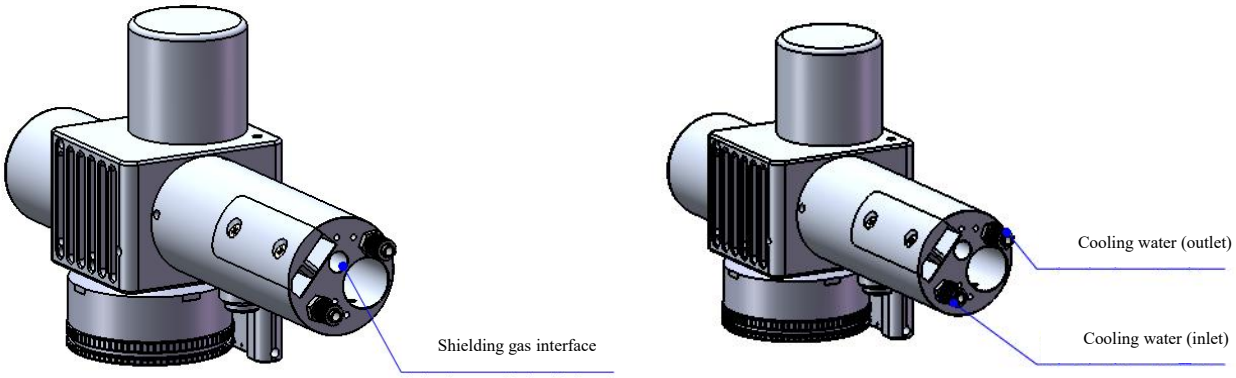

Connection of cooling water and shielding gas and usage requirements:

Note: Gas for regular use: Compressed air (oil-water filtration required)

Gas for regular use: argon, nitrogen and compressed air (oil-water filtration required).

3.1.1 Cooling water: The 6mm air tube is connected. The main function is that the excess heat is taken away by cooling through the internal structural member water route when the heat is produced by the light path in the cavity to ensure the

cleaning performance. The series connection of cooling water pipeline is required, with one-in and one-out water circulation connected.

3.1.2 Maintained gas: The 6mm air tube is connected for butt welding gas protection, with input pressure＜0.5-0.8MPa.

3.2 Optical fiber input installation

※ Arrange horizontally, and take out the dustproof seal cover.

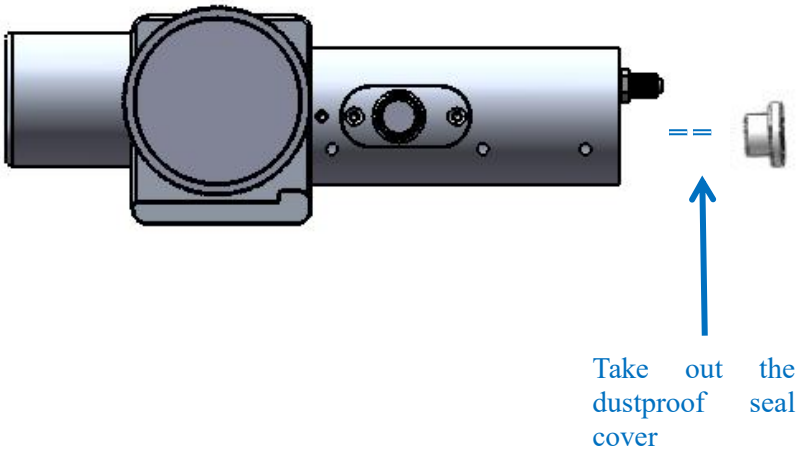

※ Insert the head of optical fiber into the bottom slowly, and tighten the optical fiber with the M4 set screw.

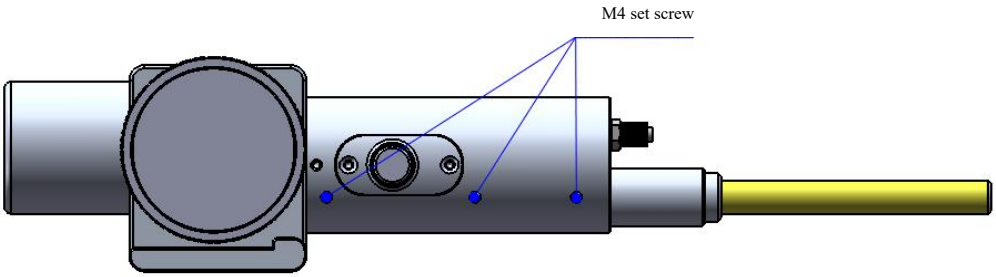

※ Protect the optical fiber end from bending with the wire harness jacket, and collect the wires and water pipes in an integral way.

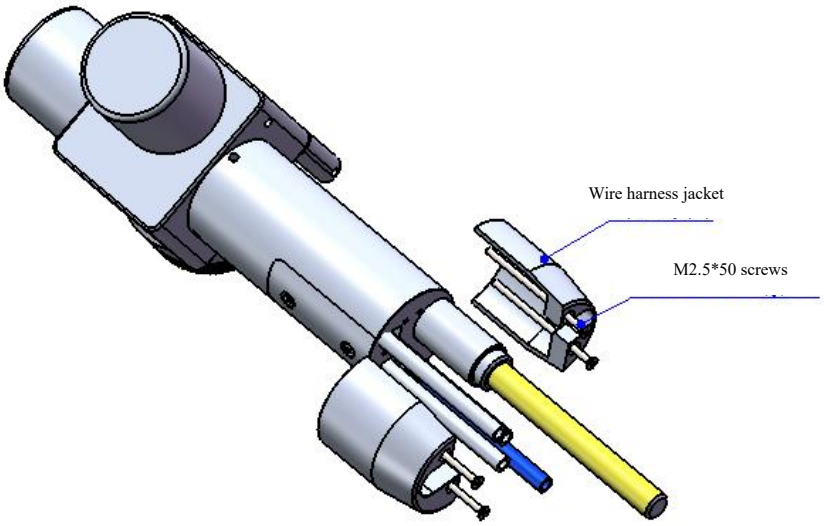

※ Before the laser presents, remove the front end clamshell dust blocking plate! !

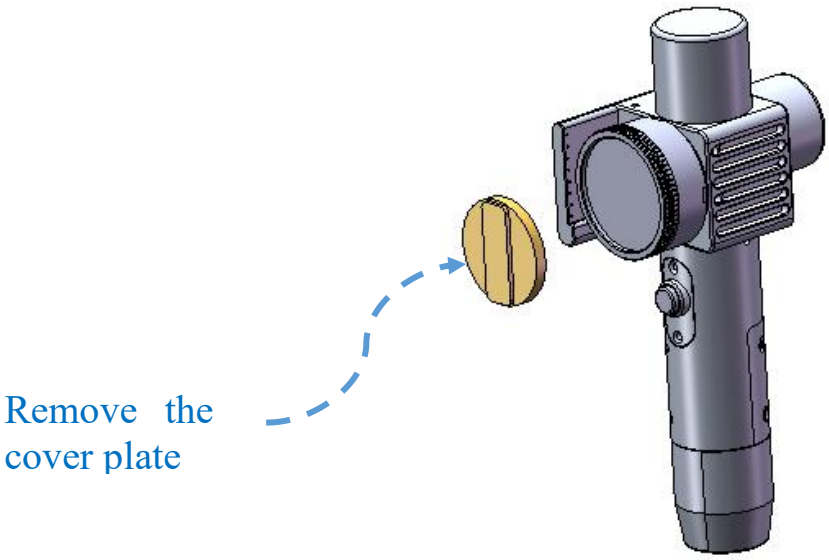

3.3 Fixed-focus support module

1. It can accurately position the object for scanning and cleaning. The lower part can be fixed by screws. It can also be scanned and cleaned by universal movement.

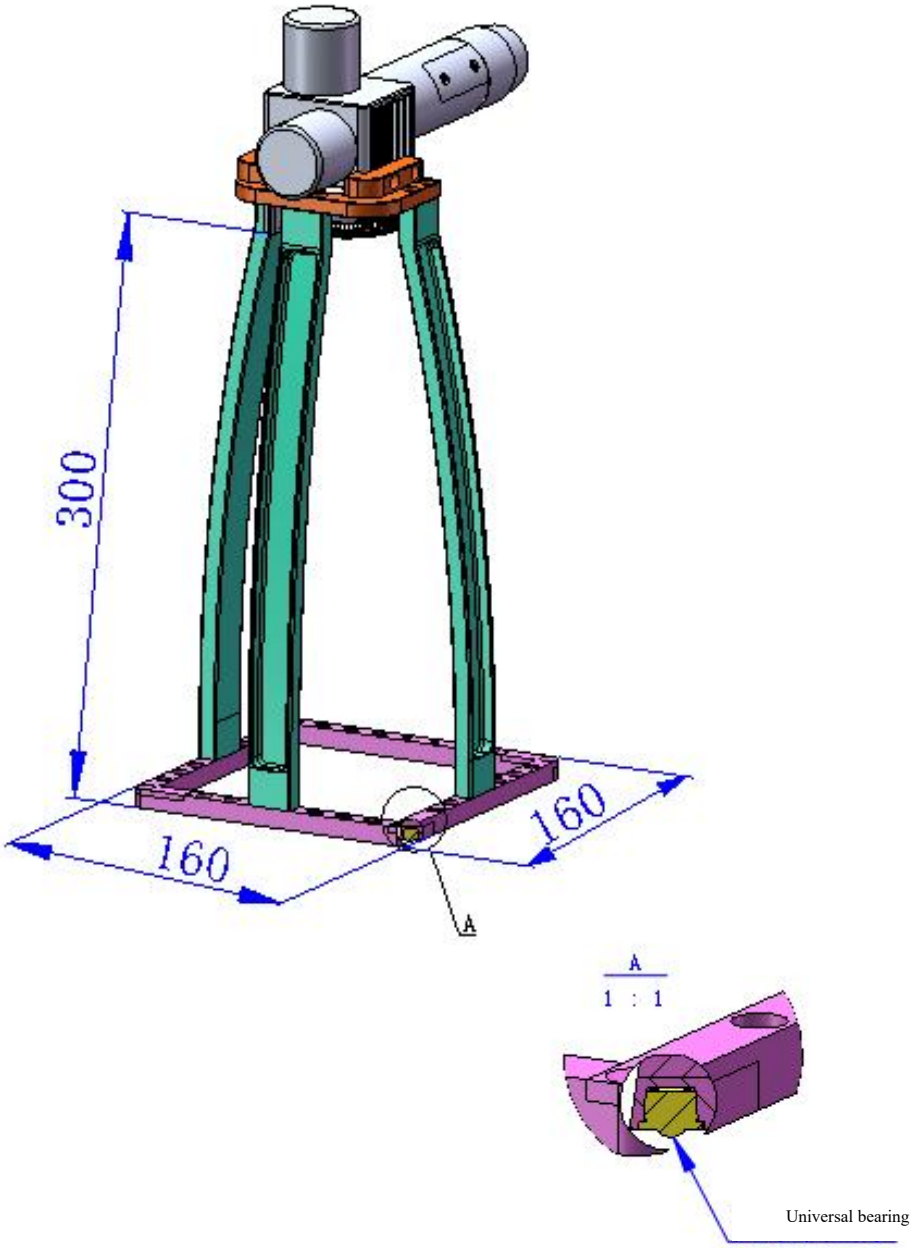

3.4 Side-blown module

Blow off the residual dust on the surface of the object cleaned.

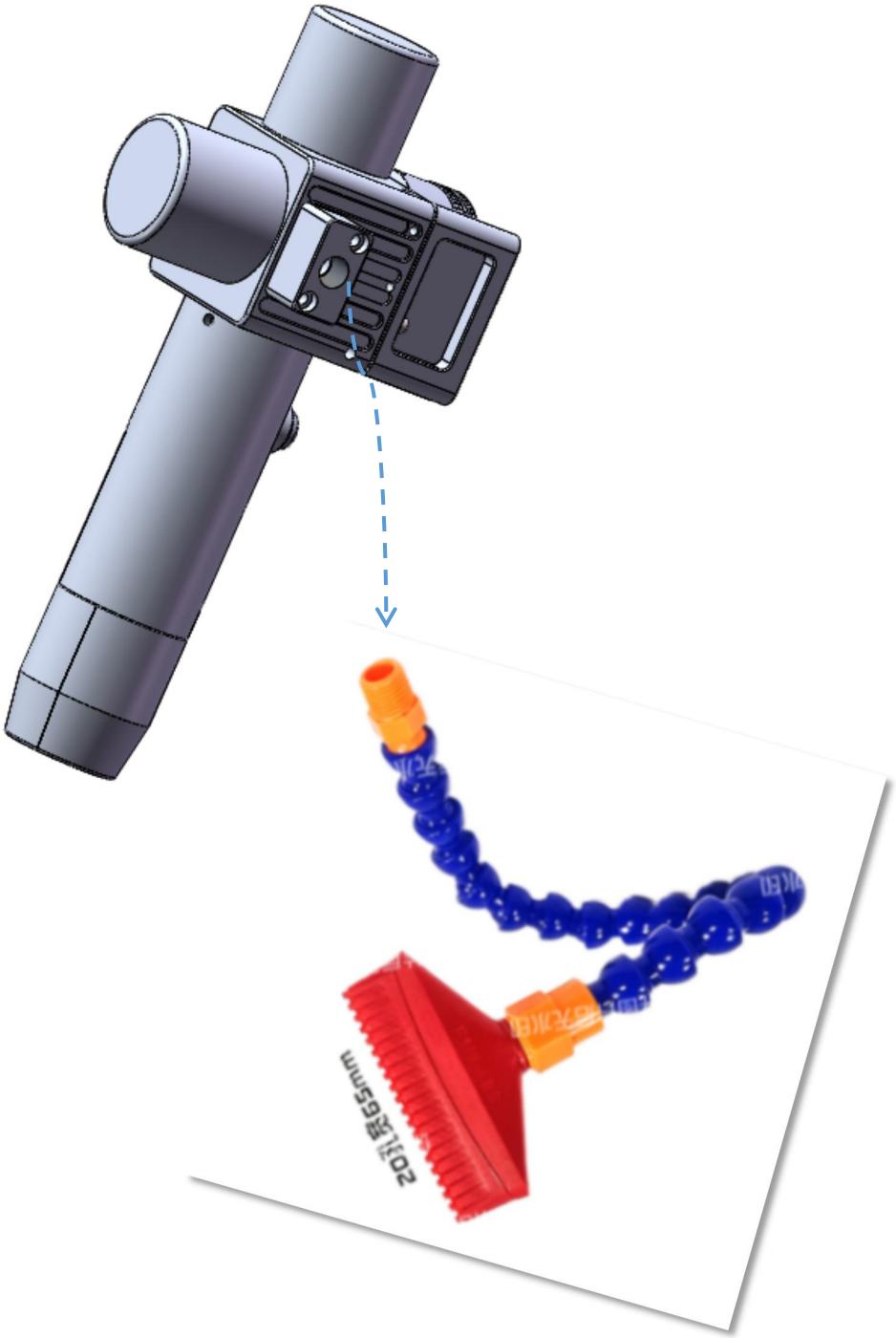

Chapter IV Maintenance

4.1 Structure of optics lens

※ The assembly is completed in the dust-free plant at the time of replacement of parts. In principle, except for the front-end first protective glass can be disassembled and assembled, other modules are forbidden to be dismounted. If it is necessary to check the collimating lens, focus lens and galvanometer lens, the product shall be put into a clean environment for disassembly.

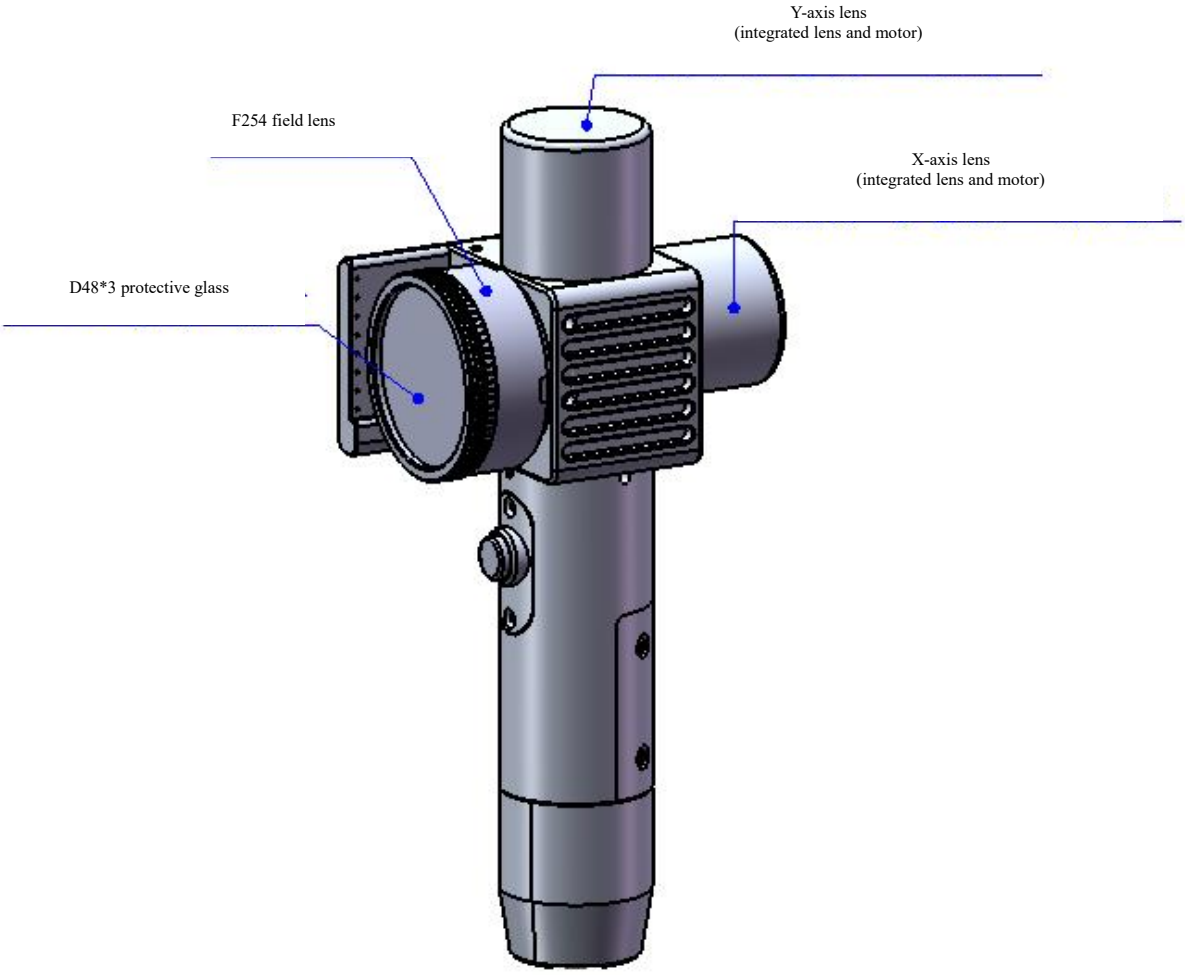

4.2 Cleaning of optics lens

※ When the optics lens are cleaned, the operation method and attention points are as follows:

※ Tools: Dust-free gloves or dust-free fingerstall, dust-free wiping cotton swab, isopropyl alcohol, and caned dry and pure compressed air.

※ Spray the isopropyl alcohol onto the dust-free cotton swab, align the lens to eyes, gently pinch the side edge of the lens with left thumb and index finger and hold the dust-free cotton swab with right hand to gently wipe the front and back of the lens in a single direction from bottom to top or from left to right (avoid wiping back and forth to avert the secondary contamination of lens), blow the surface of the lens with filling dry and pure compressed air and confirm the surface of lens is free from foreign matters after cleaning.

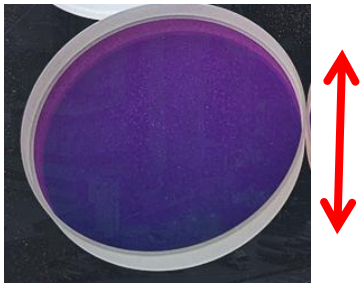

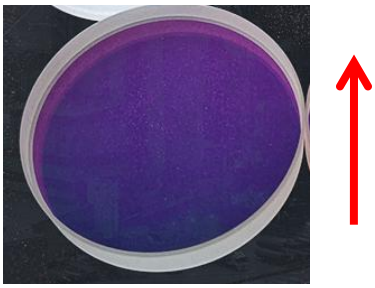

4.3 Disassembly and assembly of optics lens

4.3.1 Disassembly and assembly of protective glass

Tools: Dust-free cotton swab, alcohol.

※ The disassembly and assembly shall be completed in a clean place. When the lens are dismounted, the dust-free gloves or dust-free fingerstall.

※ Disassembly and assembly steps:

Step I: Clean up all the dust on the surface of the laser head firstly.

Step II: Rotate it counterclockwise and take out the locking ring to replace the protective lens.

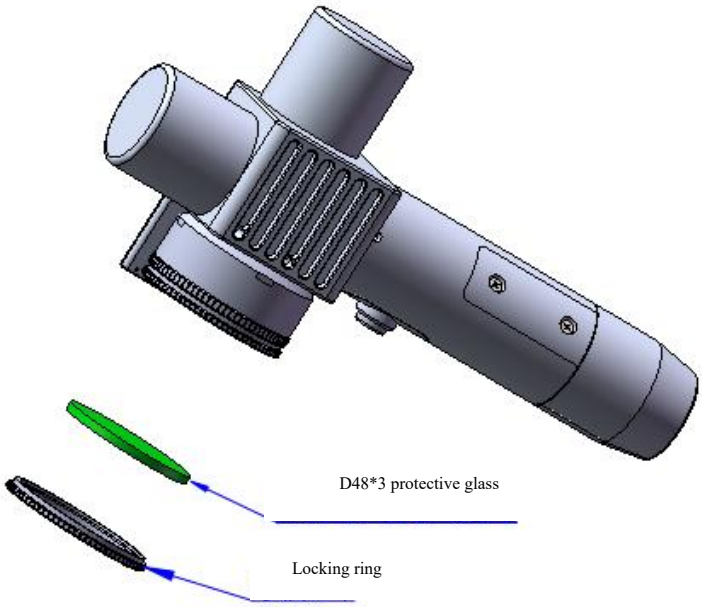

Chapter V Laser Cleaning System

5.1 Installation dimension drawing for product

5.1.1 Installation dimension of touch screen

External dimension (209.5*150*24)mm

The installation dimension of the touch screen is shown in the following figure:

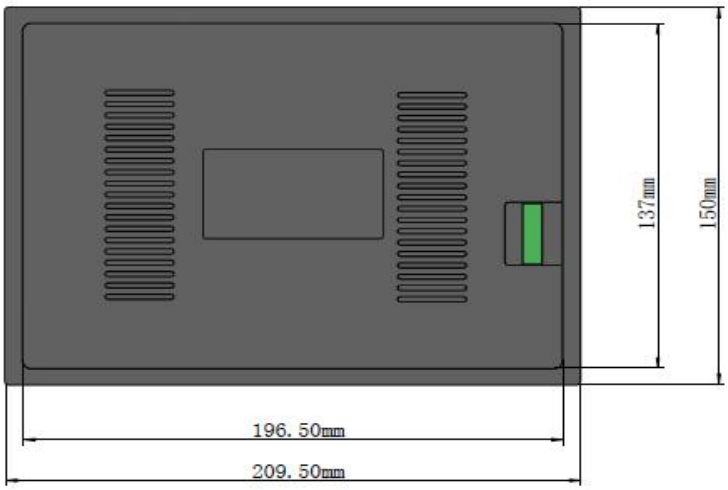

Rear view

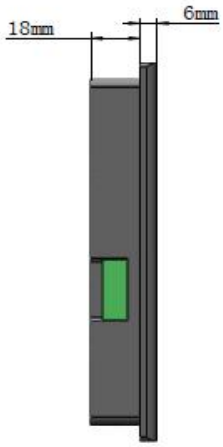

Left view

Top view

5.1.2 Installation dimension of main board

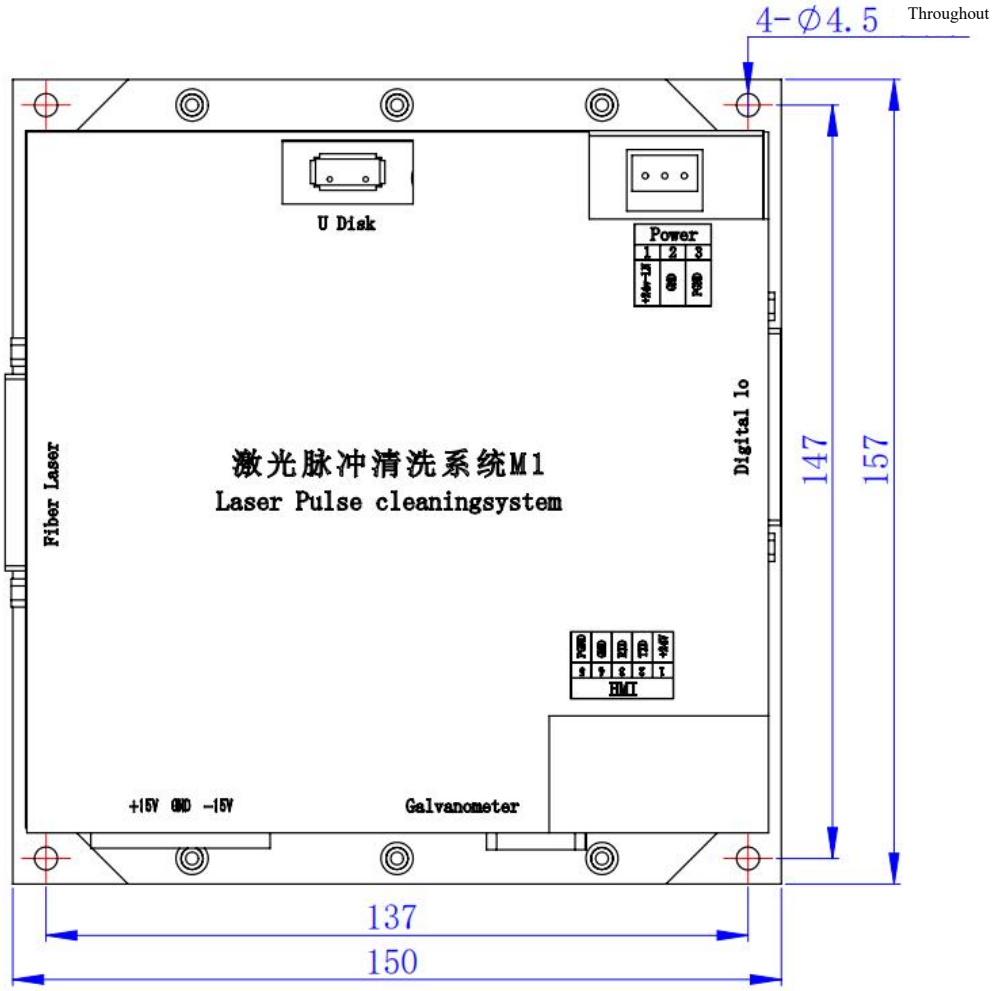

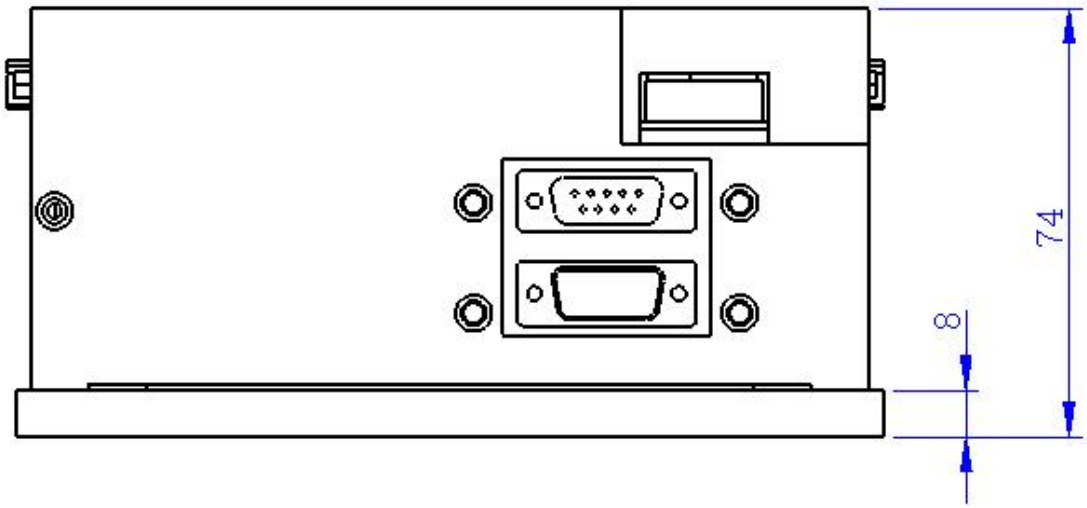

Chapter VI Electrical

6.1 Bill of electrical materials

List					
Serial No.	Name	Graphical Representation	Specification	Quantity	Note
1	Hand-held Pulse Cleaning Head		FWH50-P10A	1PCS	
2	24V power pack	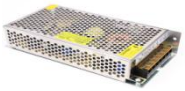	S-60-24	1PCS	
3	15V power pack		TL-60D-R	1PCS	
4	Display screen 7 inches		7 inches, pulse RD63X_T70_15WT	1PCS	
5	Display screen connecting wire		XSPLJX-001	1PCS	
6	Laser pulse cleaning system M1		H080-070A	1PCS	
7	Protective glass		D48*3	4	

6.2 System wiring

The following figure is a schematic diagram for wiring of the whole system. Refer to the schematic diagram for system wiring. Refer to relevant chapters for detailed interface definition.

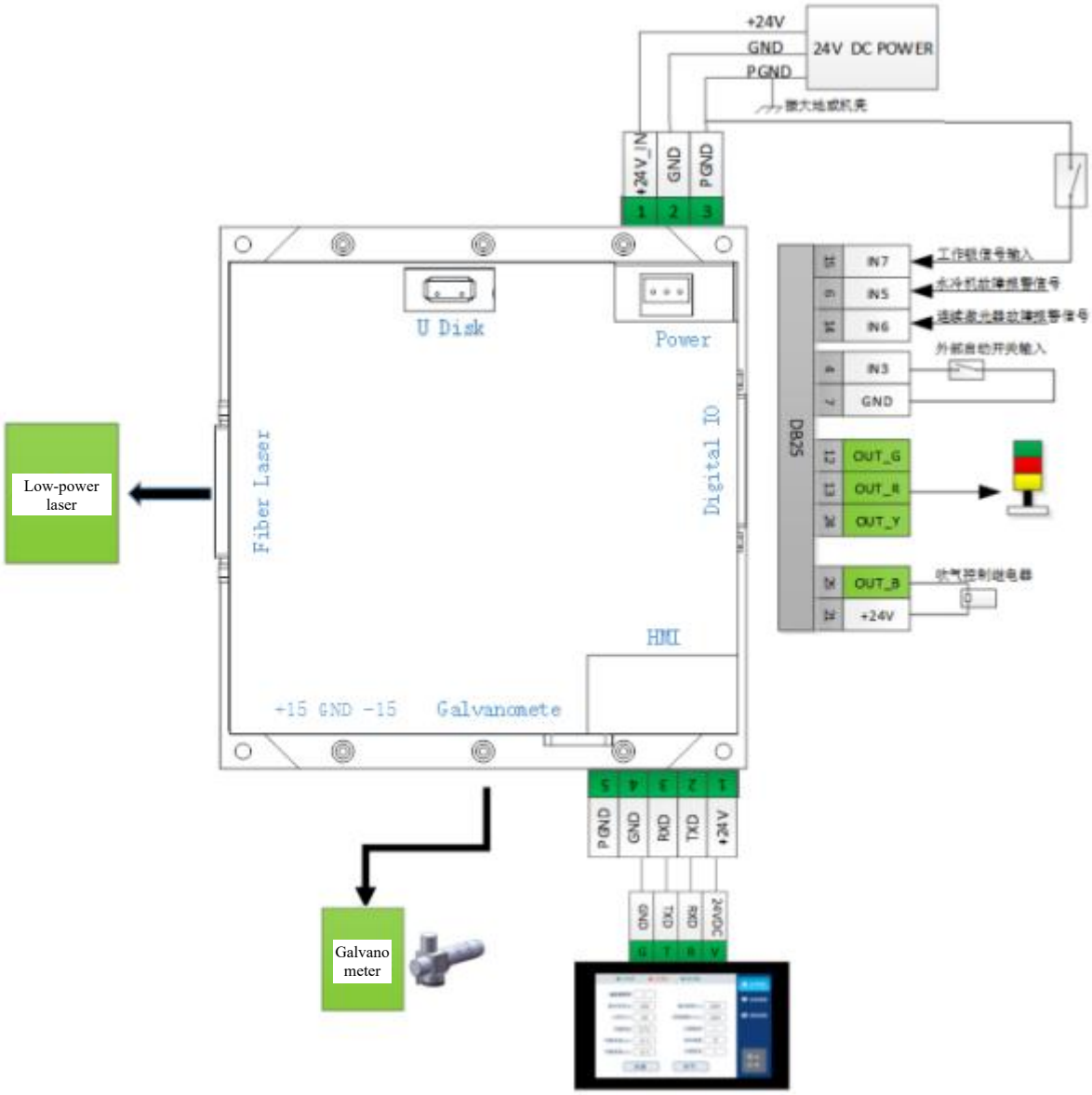

Note:
Don't connect the reserved pin in the mainboard.

6.3 Power interface

The Power interface is a 3-3PIN green terminal, which provides a power interface for the main board externally, and the voltage is 24V(DC 24V).

Table 6.3.1 shows the definition of power supply interface.

Table 6.3.1

Pin	Signal	Definitions	Instructions
1	+24V_IN	Power input of main board	+24V external power input, with current greater than 3A
2	GND	Power reference ground	-
3	PGND	External shielding ground	Generally connecting to ground or enclosure

6.4 Laser interface

The laser adapts to the DB25 low-power fiber laser interface. Please use the correct interface according to the actual laser used.

See Table 6.4.1 for the definition of low-power laser interface.

Table 6.4.1

Pin	Signal	Definitions	Instructions
1	D0	Laser Power	
2	D1		
3	D2		

4	D3		
5	D4		
6	D5		
7	D6		
8	D7		
9	PLATCH	Power latch signal	
10	GND	Reference ground	
11	LASERST2	Laser status	
12	LASERST3	Laser status	
13	NC		
14	GND	Reference ground	
15	NC		
16	LASERST0	Laser status	
17	+5V	5V power supply output	
18	MO	Signal of master oscillator	
19	AP	Switching signal of power amplifier	
20	PRR	Repetition frequency	
21	LASERST1	Laser status	
22	RedPt	Red laser index signal	
23	EMSTOP	Emergency output stopping	
24	NC		
25	NC		

6.5 Galvanometer interface

The main board provides a galvanometer interface.

See Table 6.5 for the definition of galvanometer interface.

Table 6.5.1

Pin	Signal	Definitions	Instructions
1	CLK-	Negative terminal of clock signal	
2	SYNC-	Negative terminal of synchronizing signal	
3	XChannel-	Negative terminal of galvanometer X signal	
4	YChannel-	Negative terminal of galvanometer Y signal	
5	GND	Reference ground	
6	CLK+	Positive terminal of clock signal	
7	SYNC+	Positive terminal of synchronizing signal	
8	XChannel+	Positive terminal of galvanometer X signal	
9	YChannel+	Positive terminal of galvanometer Y signal	

6.6 Digital IO interface

The main board provides a universal IO interface. Output IO can directly drive relay with OC output, and the maximum current can reach 500mA. The external connection and relay wiring are shown in Figure 6.6.1. Table 6.6.2 Schematic Diagram of Control Card Input

See table 6.6 for the definition of Digital IO interface.

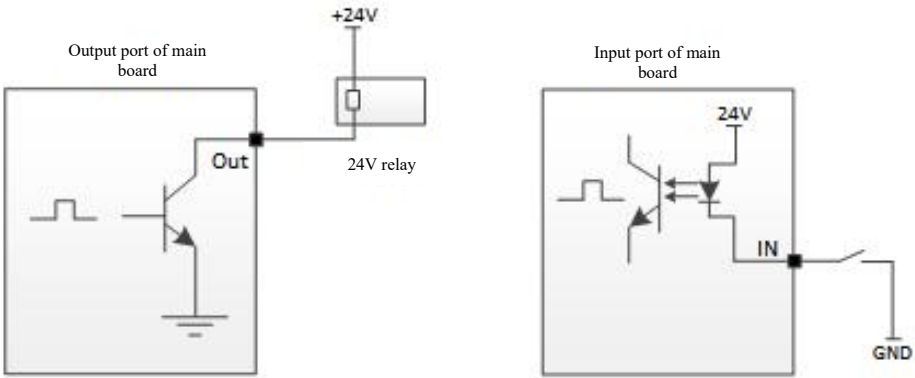

Figure 6.6.1 Schematic Diagram of Output Port Connection
Figure 6.6.2 Schematic Diagram of Input Port Connection

Table 6.6

Pin	**Signal**	**Definitions**	**Instructions**
1	IN0	External linkage signal 1	Refer to the appendix Description of Linkage
2	IN1	External linkage signal 2	Refer to the appendix Description of Linkage
3	IN2	Reserved	-
4	IN3	External start switch input	Generally connecting to the start button switch on the cleaning head
5	IN4	Reserved	
6	IN5	Water-cooling machine alarm input	Water cooling machine alarm level can be configured by parameters
7	GND	Power reference ground	-
8	IN8	Reserved	-
9	+5V	5V power supply output	Maximum output capacity, 500mA
10	OUT_LED3	Reserved	-
11	OUT_LED1	Reserved	-
12	OUT_G	Three-color light signal output - green light	OC output, the light is on when machining
13	OUT_R	Three-color light signal output - red light	OC output, the light is on when alarming
14	IN6	Laser failure alarm input	Laser alarm level can be configured by parameters

15	IN7	Signal input of working lock	This pin must be connected to PGND (not GND) to be used as a working lock signal.
16	OUT_0	Reserved	-
17	OUT_1	Reserved	-
18	OUT_2	Reserved	-
19	DA1	Reserved	
20	OUT_3	Reserved	-
21	+24V	+24V power output	Maximum output current, 500mA
22	ADC_IN	Reserved	-
23	OUT_LED2	Signal output of laser emission allowed-signal light	OC output, the light is on when laser emission is allowed on the panel
24	OUT_Y	Three-color light signal output - yellow light	OC output, the light is on when idle
25	OUT_B	Blowing signal output	OC output

6.7 HMI interface

The HMI interface is a 5PIN green terminal, through which the main board supplies power to and communicates with the HMI. Direct connection can be made by using the 1.5m touch screen cable.

Chapter VII Introduction to HMI Operation

7.1 Introduction to HMI function

As for the operation panel of the embedded laser cleaning control system (hereinafter referred to as "HMI"), the 7cun configuration TFT touch screen is used, with beautiful interface and convenient operation. Refer to the following figure for the HMI main interface.

Main interface of HMI

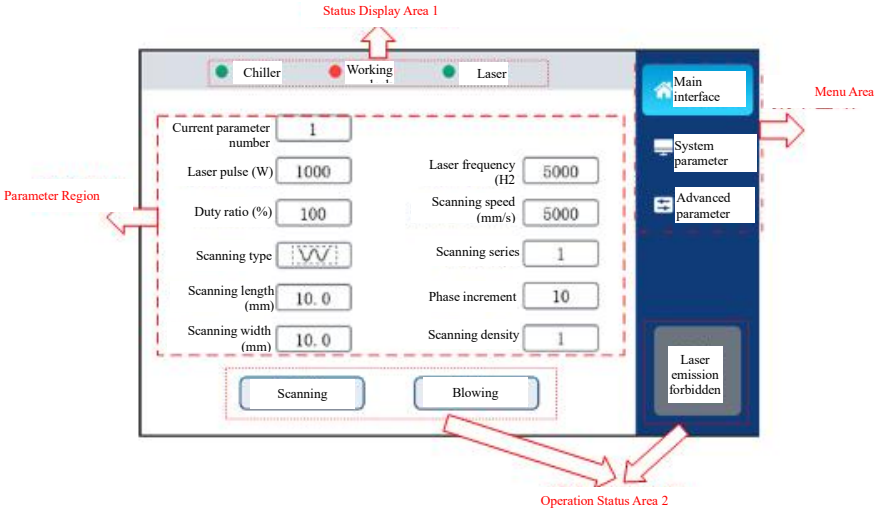

The system menu consists of [Main Interface], [System Parameters] and [Advanced Parameters]. Different parameters related to scanning and laser can be set in the main interface, which can display system and alarm status in real time; For system parameters, system-related parameters, alarm parameters and authorization management can be set. For advanced parameters, higher-level restrictive parameters can be set, and a password is required to enter the advanced parameters.

The main interface consists of [Status Display Area 1], [Status Display Area 2], [Parameter Area] and [Menu Area].

7.2 Introduction to HMI operation

7.2.1 Main interface

[Status Display Area 1]: Monitor the trigger of working lock signal, laser alarm and water cooler alarm. The normal machining can only be carried out when the green color is displayed.

[Status Display Area 2]: Display machining status, and manual touch can be operated. Click < Scan > to manually control the oscillation of the galvanometer when idle, and click < Blow > to manually blow when idle. When the signal is given, the color of relevant icon will change. In the state of <Laser Emission Forbidden>, the system will not emit laser or start the trigger of the key; When laser-emission machining is required, you need to click the icon <Laser Emission Forbidden> to make it turn into the orange <Laser Emission Allowed>. When there is no alarm, press the "Start" key, and then control the laser emission, oscillation and blowing according to the parameters in the Parameter Area. At the same time, the orange sign <Laser Emission Allowed> will turn red, indicating that laser is being emitted.

[Parameter Area]: includes scanning parameters and laser parameters

Current parameter number: 9 sets of parameters can be set and selected in the system. Current parameters can be directly selected. Parameter number can be selected in linkage mode with external PLC. For the calling mode, please refer to the linkage description of system parameters.

Laser power: Used for setting the peak power of the laser.

Laser frequency: Used to set the laser PWM modulation signal frequency.

Laser duty ratio: Used to set the duty ratio of PWM modulation signal of continuous laser; Advanced parameters should be equipped with continuous laser.

Laser pulse width: Used to set the pulse width of pulsed laser; Advanced parameters should be equipped with pulsed laser.

Scanning speed: Used to set the scanning speed of galvanometer.

Scanning length: Used to set the scanning length of galvanometer.

Scanning width: Used to set the scanning width of galvanometer.

Scanning width (mm)	Scanning speed mm/s (upper limit)
200-300	30000
50-200	20000
40-49	18000
30-39	14000
20-29	12000
10-19	6000
5-9	3000
3-5	2000

1-3	1000

Scanning type: Used for setting the scanning waveform of galvanometer. Support

‘ ’, ‘ ’, ‘ ’, ‘ ’, ‘ ’, ‘ ’, ‘ ’, ‘ ’.

Scanning series: Used to set the number of sine waves during scanning. Special parameters for sine wave-filled rectangles.

Phase increment: Used to set the change value of each phase during scanning. Special parameters for sine wave-filled rectangles and straight line rotating into circle.

Scanning density: Used for setting the density of each sine wave during scanning. Special parameters for sine wave-filled rectangles.

Scanning interval: Used for setting the interval between each straight line when scanning and filling. Special parameters for line-filled rectangles.

7.2.2 System parameter

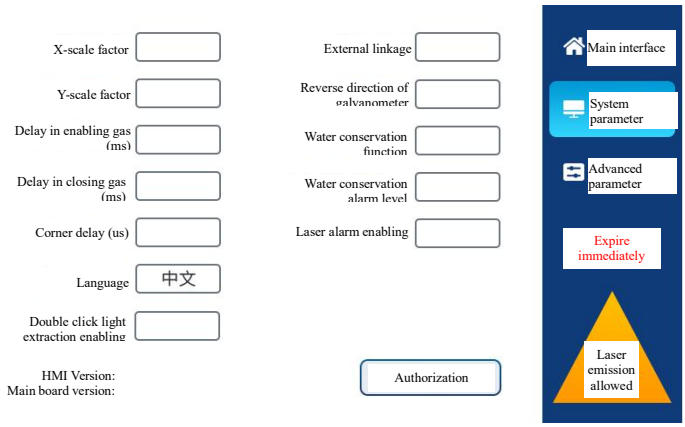

X-scale factor: Used for setting the proportion between the scanning length of the X-scale galvanometer and the actual laser-emission length, which is related to the focal length and the galvanometer. The smaller the scale factor, the longer the length actually scanned.

Scale factor: Used for setting the proportion between the scanning length of the Y-scale galvanometer and the actual laser-emission length, which is related to the focal length and the galvanometer. The smaller the scale factor, the longer the length actually scanned.

When the set length is inconsistent with the actual length and there is a slight difference, it can be modified by this parameter; when no modification is required, it is generally set by the

manufacturer.

Model of field lens	X coefficient	Y coefficient
F254	210.3	250.3

Delay in enabling gas: When starting machining, the delay in enabling gas can be set. The emission of laser will start after blowing is delayed for a period of time by pressing the external start button.

Delay in closing gas: When stopping machining, the delay in closing gas can be set. Stop blowing after stopping laser emission, and then delaying for a period of time when processing is stopped.

Language: Used for language switch.

External linkage: Used to switch the parameter number through external IO. When not enabled, the main interface displays the current parameter number, and the parameter number can be manually selected; When enabled, the main interface displays the linkage parameter number, which needs to be switched through the external IO port. During linkage, attention should be paid to switching to the main interface for machining.

Reverse direction of galvanometer: Used to deflect the scanned pattern by 90 degrees on the panel.

Water conservation function: Used to enable water conservation. When the water cooler gives an alarm, it will produce an alarm signal.

Water conservation alarm level: Set the alarming logic level of water cooler.

Laser alarm enabling: Enable the laser alarm. When the laser gives an alarm, an alarm signal will be produced.

Laser alarm level: Set the alarming logic level of laser machine.

Authorized by: Used for staging authorization management of main board.

7.2.3 Advanced parameter

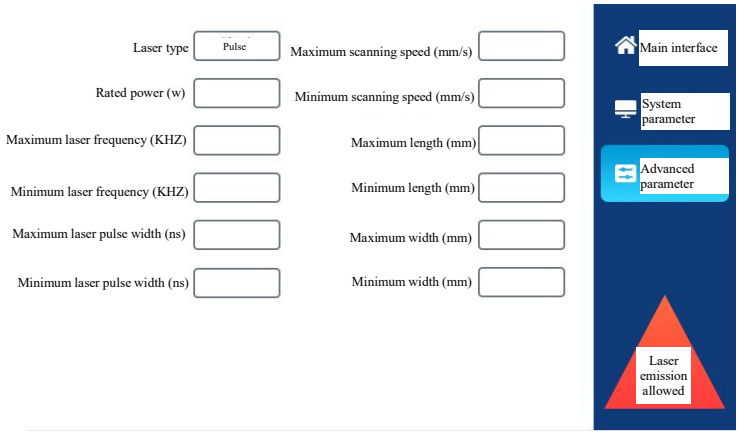

Laser type: Used to set the laser type (continuous laser or pulsed laser). When it is a continuous laser, the main interface displays the laser frequency (Hz) and duty ratio; when it is a pulsed laser, the main interface displays the laser frequency (kHz) and pulse width (ns).

Rated power: Used to set the rated power of the laser. After the rated power is correctly set, the laser power displayed in the main interface is the real value.

Maximum laser frequency: Used for setting the maximum frequency of the laser.

Minimum laser frequency: Used for setting the minimum frequency of the laser.

Maximum duty ratio: Used for setting the maximum duty ratio of laser modulation signal, special for continuous laser.

Minimum duty ratio: Used for setting the minimum duty ratio of laser modulation signal, special for continuous laser.

Maximum laser pulse width: Special for pulsed laser, and used for setting the maximum pulse width of the laser.

Minimum laser pulse width: Special for pulsed laser, and used for setting the minimum pulse width of the laser.

Maximum scanning speed: Used to set the maximum scanning speed of the galvanometer.

Minimum scanning speed: Used to set the minimum scanning speed of the galvanometer.

Maximum length: Used to set the maximum scanning length of the galvanometer.

Minimum length: Used to set the minimum scanning length of the galvanometer.

Maximum width: Used to set the maximum scanning width of the galvanometer.

Minimum width: Used to set the minimum scanning width of the galvanometer.

Note:
If no parameters have been set for the overall system, the advanced parameters should be set first, and the password of advanced parameters is 666888. Then the system parameters should be set, and finally, the main interface parameters should be set.

Chapter VIII Appendix

8.1 Description of linkage

The linkage is mainly used for retrieving the parameter number through the external IO pin, so as to interact with other systems to automatically switch the layer parameters for machining.

Before using this function, it is necessary to enable external linkage in system parameters, and then return to the main interface. In the main interface, switch parameters for machining. The system supports the retrieval of the first four groups of parameters through two linkage pins, which are in the DB25 terminal of the Digital port of the board.

Table 4-1

Parameter No. / Pin	Linkage parameter number -1	Linkage parameter number -2	Linkage parameter number -3	Linkage parameter number -4
DB25-1 pin IN0	High level / suspension	Low level	High level / suspension	Low level
DB25-2 pin IN1	High level / suspension	High level / suspension	Low level	Low level

Shenzhen RelFar Intelligent Technology Co., Ltd.

Thank you for using the intelligent technology product of Shenzhen RelFar!

Website: www.relfar.com

Tel.: 0755-23143635

Address: Factory, Area B, Haiweijingsong, Siyuan No.1 District, Qiaohe Road, Heping Community, Fuhai Sub-district, Bao'an District, Shenzhen City, Guangdong Province