Shenzhen RelFar Intelligent Technology Co., Ltd.

FWH20-DC30A Intelligent Double Pendulum Handheld Cleaning Head

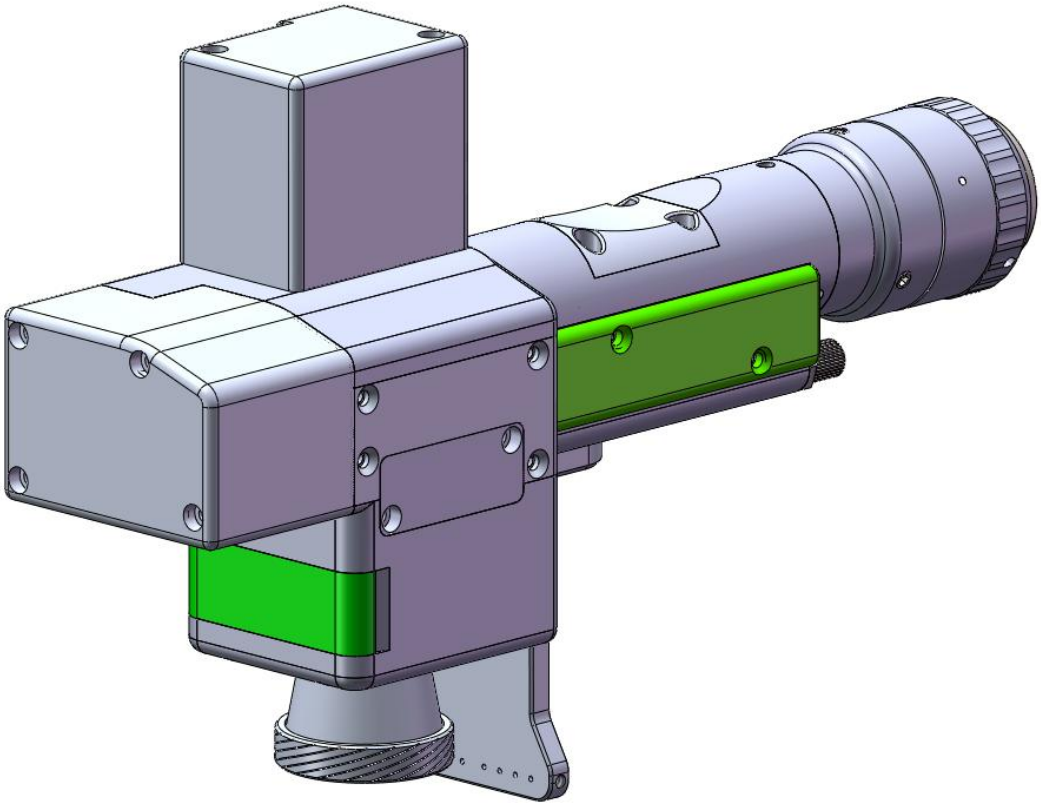

Shenzhen RelFar Intelligent Technology Co., Ltd.

Website: www.relfar.com

Tel.: 0755-23143635

Address: Factory, Area B, Haiweijingsong, Lusiyuan 1 District, Qiaohe Road, Heping Community, Fuhai Sub-district, Bao'an District, Shenzhen City, Guangdong Province

Date of issue: June.26th, 2023 Version: B

Foreword

Thank you for choosing our products!

To enable you to have an overall understanding of our company, there is a detailed introduction regarding features, structural features, technical parameters, instructions for use and maintenance of the product in the Manual. Carefully read the Manual to help you better us it before the product is used.

Due to constant update of product functions, the product you received may differ from the description in the manual. We hereby express our deep sorry for this matter! In case of any question in the use process, timely call us for consultation, and we will offer dedicated service to you wholeheartedly.

Contents

Chapter I Overview 5
1.1 Product parameter 5
1.2 Product parameter 5
Chapter II Structural Characteristics 7
2.1 Product structure 7
Chapter III Product Installation 8
3.1 Pipe connection 8
3.1.1 Cooling water: The 6mm air tube is connected. The main function is that the excess heat is taken away by cooling through the internal structural member water route when the heat is produced by the light path in the cavity to ensure the cleaning performance. The series connection of cooling water pipeline is required, with one-in and one-out water circulation connected. 8
3.1.2 Maintained gas: The 6mm air tube is connected for butt welding gas protection, with input pressure＜0.5~0.8MPa. 9
3.2 Optical fiber input installation 10
Chapter IV Maintenance 12
4.1 Structure of optics lens 12
4.2 Cleaning of optics lens 13
4.3 Disassembly and assembly of optics lens 14
4.3.1 Disassembly and assembly of collimation lens 14
4.3.2 Disassembly and assembly of focus lens 15
4.3.3 Disassembly and assembly of protective glass 16
Chapter V Laser Cleaning System 18
5.1 Installation dimension drawing for product 18
5.1.1 Installation dimension of touch screen 18
External dimension (209.5*150*24)mm 18
5.1.2 Installation dimension of mainboard 19
Chapter VI Electrical 20
6.2 System wiring 21
6.3 CN5 power supply interface 22
6.4 CN1 wire feeder interface 22
6.5 CN2 laser interface 23
6.6 CN3 temperature sensor interface 24
6.7 HMI touch screen interface 24
6.8 CN4 reserved serial interface 24
6.9 CN6 external start and safety lock interface 25
6.10 CN7 common input interface 1 25
6.11 CN8 common output interface 25
6.12 CN9 common input interface 2 26
6.13 Galvanometer interface 26

Chapter VII Introduction to HMI Operation 27
7.1 Introduction to HMI function 27
7.2 System parameter setting. 28
7.3 Equipment parameters 29
7.4 Alarm message 30
Chapter VIII Processing Module Switching 31
8.1 Selection of processing type 31
8.2 Hint of module replacement 31
8.3 Switch completion 32
8.4 System parameters 32
Chapter IX Monitoring and Protection Device 33
9.1 Temperature parameter setting of protective glass 33
9.2 Bluetooth APP monitoring 34

Chapter I Overview

1.1 Product parameter

Name	Intelligent Double Pendulum Handheld Cleaning Head
Model	FWH20-DC30A
Fiber interface	QBH
Wavelength scope	1,070±20nm
Rated power	≤3000W
Collimation focal length	F50mm
Focus focal length	F800mm
Scanning Range	300mm long *300mm wide
Scanning speed	20,000mm/s
Auxiliary pressure	≥0.5~0.8Mpa
Effective clear aperture	φ22
Swing type	
Weight	0.96Kg

1.2 Product parameter

※ Before the laser presents, the front end flip cover plate is required to be opened.

※ To ensure personal safety, wear the special fiber laser protective glasses before operation.

※ It is necessary to keep the product clean and prevent the cooling liquid, condensate water or other foreign matter from intruding into the cavity, or the functional contamination and functional impact of related parts will be incurred.

Chapter II Structural Characteristics

2.1 Product structure

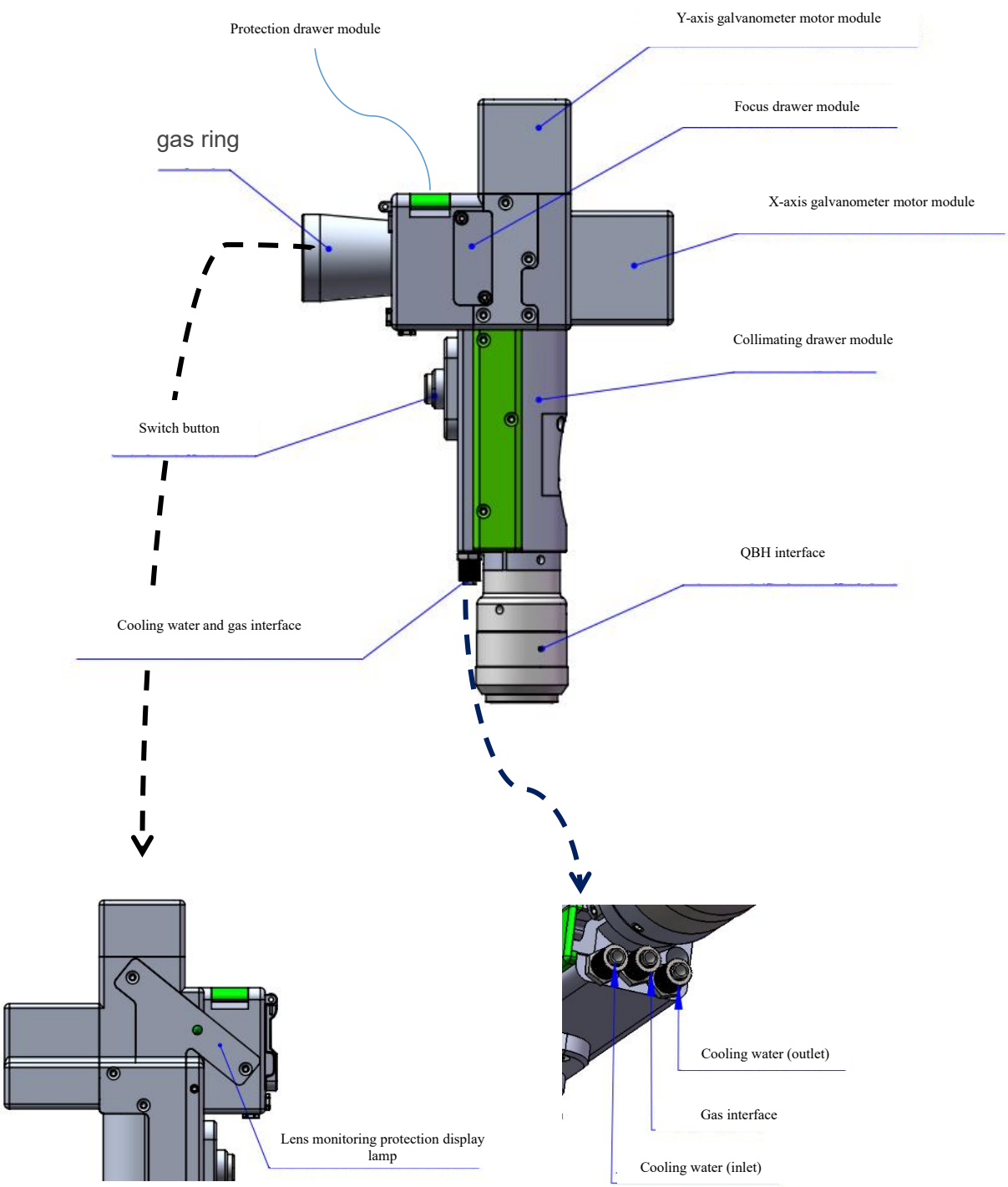

Chapter III Product Installation

3.1 Pipe connection

Cooling water circuit and auxiliary protective gas connection

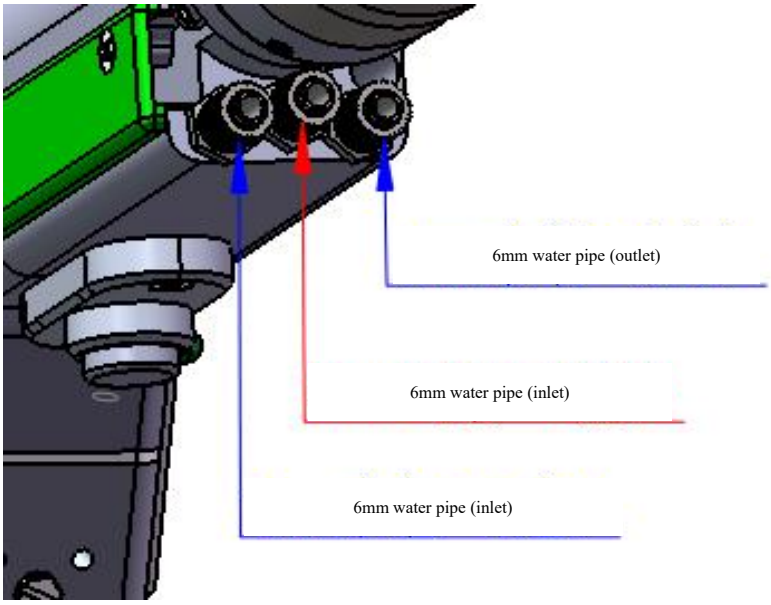

Connection of cooling water and protective gas and usage requirements:

Note: Gas for regular use: Compressed air (oil-water filtration required)

Gas for regular use: argon, nitrogen and compressed air (oil-water filtration required).

3.1.1 Cooling water: The 6mm air tube is connected. The main function is that the excess heat is taken away by cooling through the internal structural member water route when the

heat is produced by the light path in the cavity to ensure the cleaning performance. The series connection of cooling water pipeline is required, with one-in and one-out water circulation connected.

3.1.2 Maintained gas: The 6mm air tube is connected for butt welding gas protection, with input pressure＜0.5~0.8MPa.

3.2 Optical fiber input installation

※ The QBH is a horizontal arrangement to take out the dustproof seal cover.

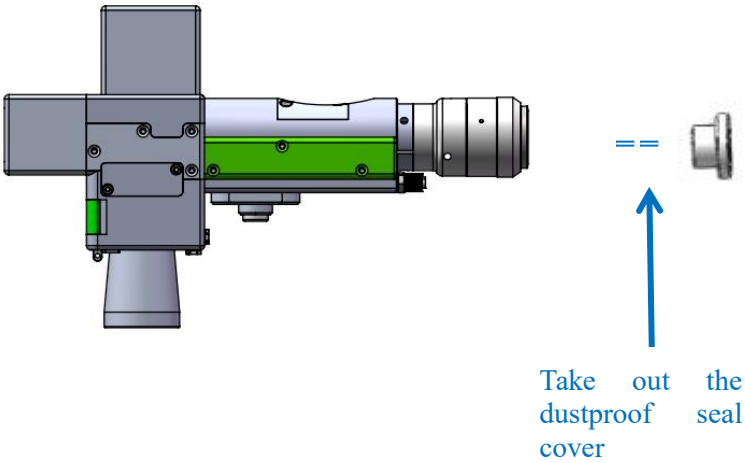

※ Align the red dot on the fiber optic head with the QBH red dot, and slowly insert the fiber optic head into the QBH.

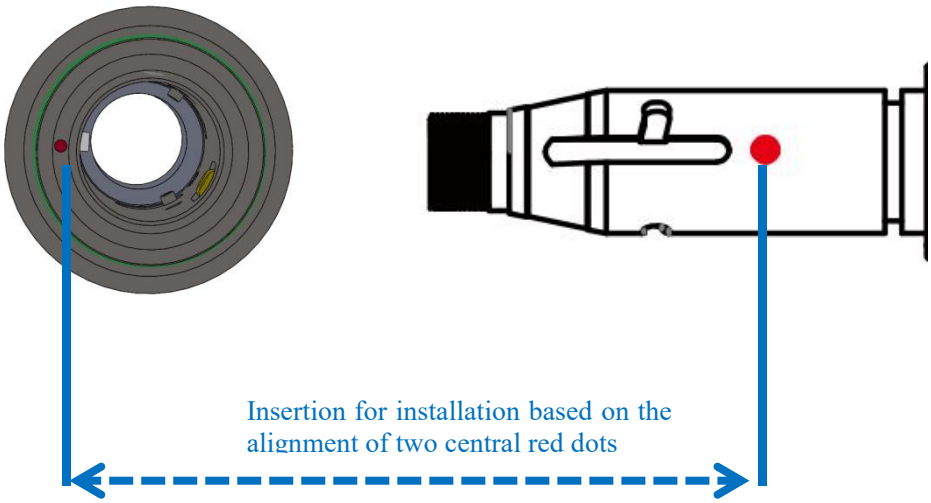

※ The QHB is screwed to the locking state: Rotate it to the limiting position clockwise (hearing the "click"), lift up the rotating mantle, and clockwise rotate the mantle until the head of optical fiber is compressed.

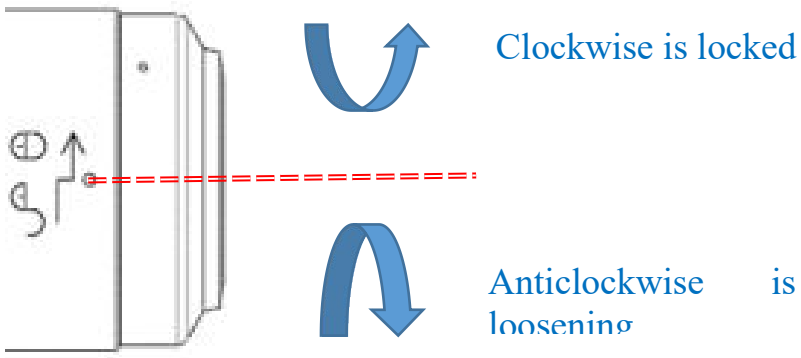

※ Before the laser presents, open the front end clamshell dust blocking plate!

Chapter IV Maintenance

4.1 Structure of optics lens

※ The assembly is completed in the dust-free plant at the time of replacement of parts. In principle, except for the front-end first protective glass can be disassembled and assembled, other modules are forbidden to be dismounted. If it is necessary to check the collimating lens, focus lens and galvanometer lens, the product shall be put into a clean environment for disassembly.

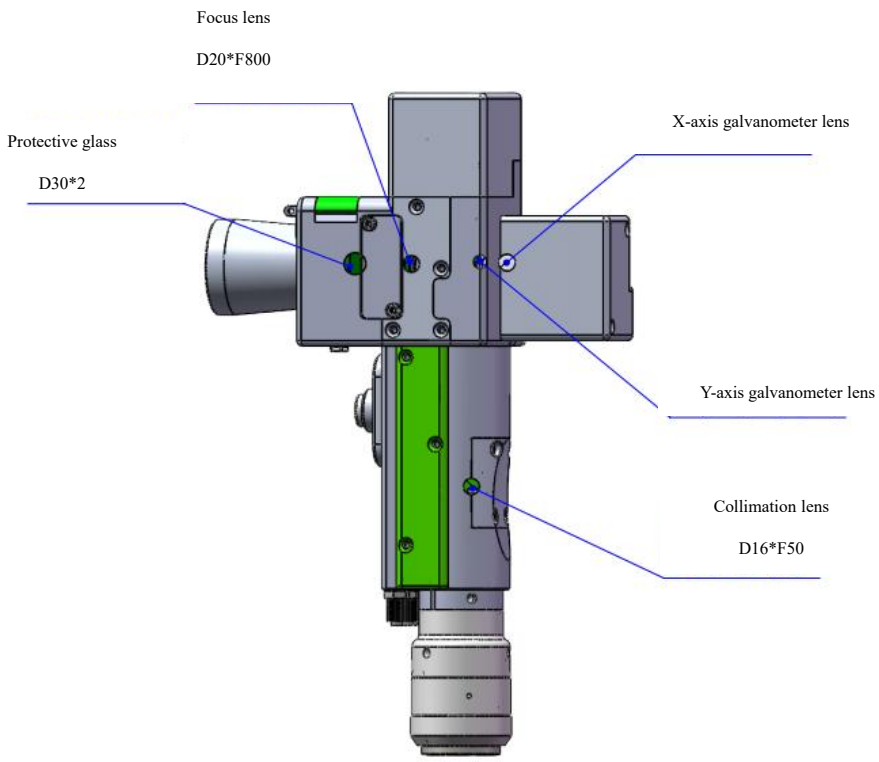

4.2 Cleaning of optics lens

※ When the optics lens are cleaned, the operation method and attention points are as follows:

※ Tools: Dust-free gloves or dust-free fingerstall, dust-free wiping cotton swab, isopropyl alcohol, and caned dry and pure compressed air.

※ Spray the isopropyl alcohol onto the dust-free cotton swab, align the lens to eyes, gently pinch the side edge of the lens with left thumb and index finger and hold the dust-free cotton swab with right hand to gently wipe the front and back of the lens in a single direction from bottom to top or from left to right (avoid wiping back and forth to avert the secondary contamination of lens), blow the surface of the lens with filling dry and pure compressed air and confirm the surface of lens is free from foreign matters after cleaning.

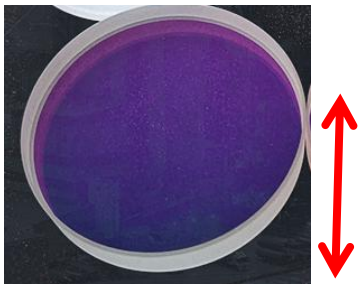

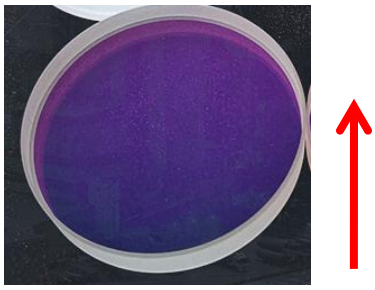

4.3 Disassembly and assembly of optics lens

4.3.1 Disassembly and assembly of collimation lens

Tools: 2mm inner-hexagon wrench, dust-free cotton swab, alcohol.

※ The disassembly and assembly shall be completed in a clean place. When the lens are dismounted, the dust-free gloves or dust-free fingerstall.

※ Disassembly and assembly steps:

Step I: Clean up all the dust on the surface of the laser head firstly.

Step II: Loosen the 4-M2.5*6 screw in the figure with 2mm inner-hexagon wrench.

Step III: Take out the collimating drawer module and seal the port with textured paper to prevent the dust from entering the cavity.

Step IV: When the two bosses are aligned with the opening slot after the gland is rotated anticlockwise, remove them upward and replace the lens. (Note that the orientation of lens installation can be divided into plane and convex surface. After disassembly, record it; otherwise, the optical path will be affected.)

Note: The drawer gap shall be installed upwards.

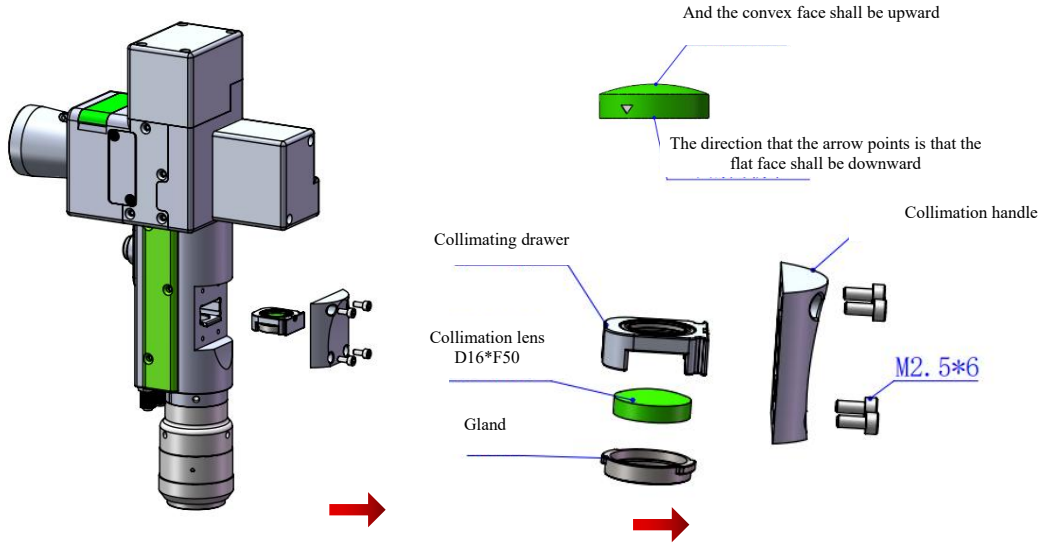

4.3.2 Disassembly and assembly of focus lens

Tools: 2mm inner-hexagon wrench, dust-free cotton swab, alcohol

※ The disassembly and assembly shall be completed in a clean place. When the lens are dismounted, the dust-free gloves or dust-free fingerstall.

※ Disassembly and assembly steps:

Step I: Loosen lateral 2-M2.5 screws

Step II: Remove the focus drawer assembly horizontally and seal the exposed sealing surface of the cavity with textured paper to prevent dust from entering.

Step III: When the two bosses are aligned with the opening slot after the gland is rotated anticlockwise, remove them upward and replace the lens. (Note that the orientation of lens installation can be divided into plane and convex surface. After

disassembly, record it; otherwise, the optical path will be affected.)

Note: The drawer gap shall be installed upwards.

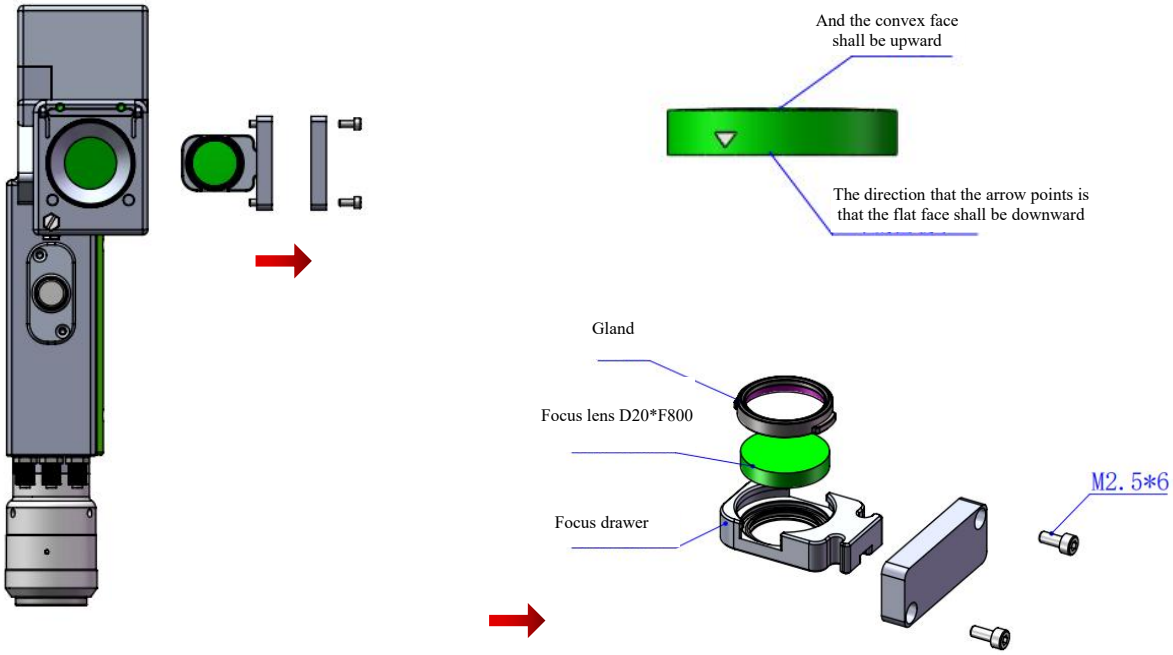

4.3.3 Disassembly and assembly of protective glass

※ The disassembly and assembly shall be completed in a clean place. When the lens are dismounted, the dust-free gloves or dust-free fingerstall.

Change the protective lens

The first step is to take both sides of the drawer in hand and pull out the protective drawer seat upward. After taking it out, seal the window exposed on the cavity with textured paper to prevent dust from entering.

Step II, when the two bosses are aligned with the opening slot after the gland is rotated anticlockwise, remove them upward and replace the lens.

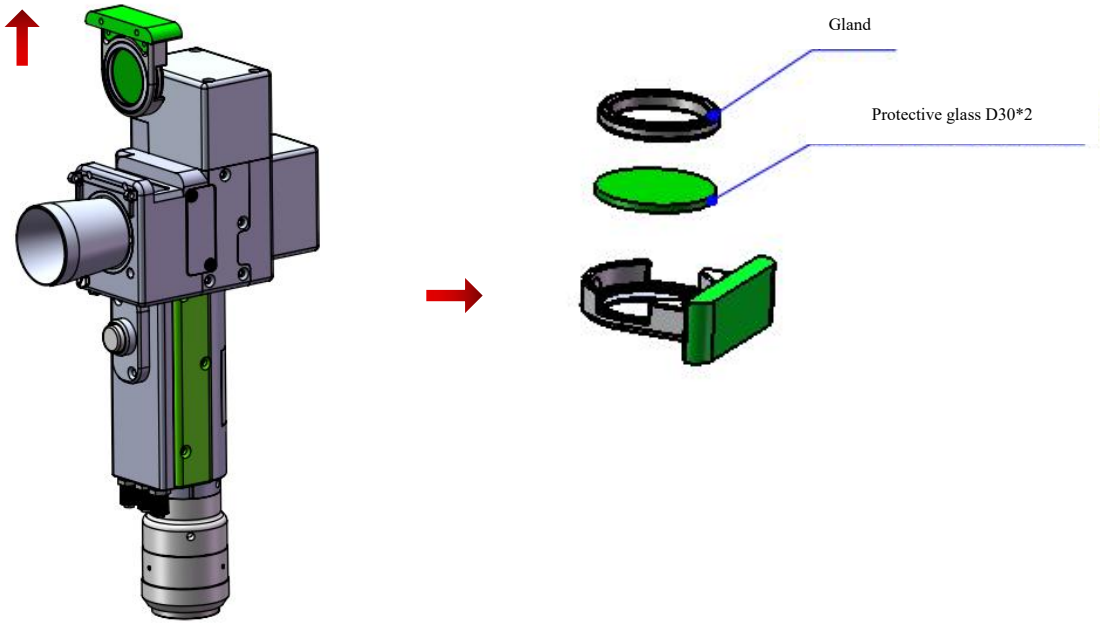

Chapter V Laser Cleaning System

5.1 Installation dimension drawing for product

5.1.1 Installation dimension of touch screen

External dimension (209.5*150*24)mm

The installation dimension of the touch screen is shown in the following figure:

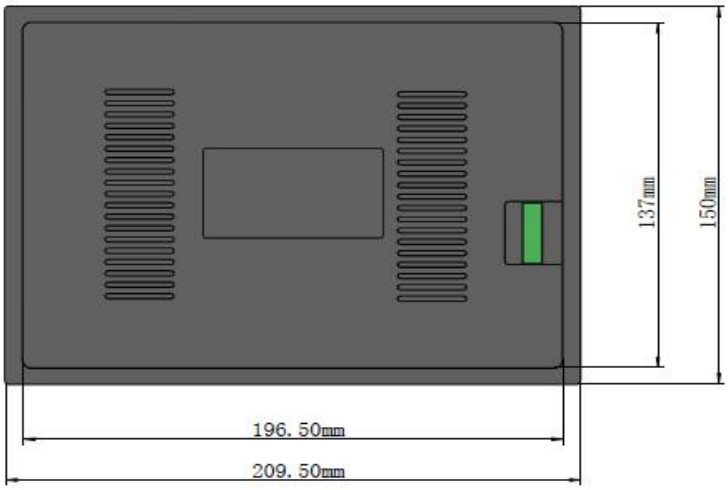

Rear view

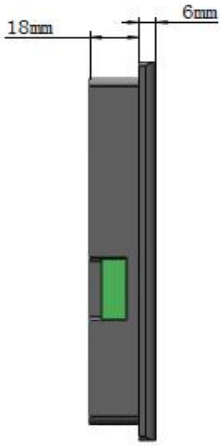

Left view

Top View

5.1.2 Installation dimension of mainboard

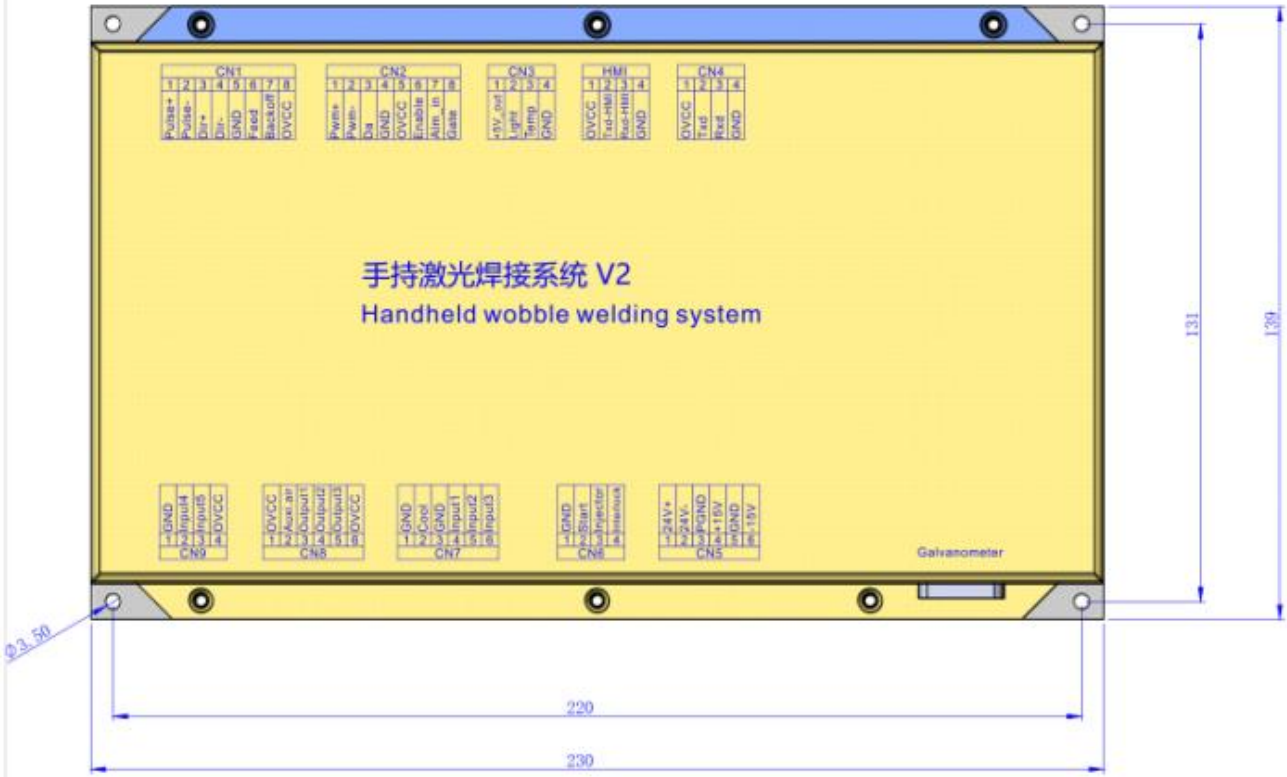

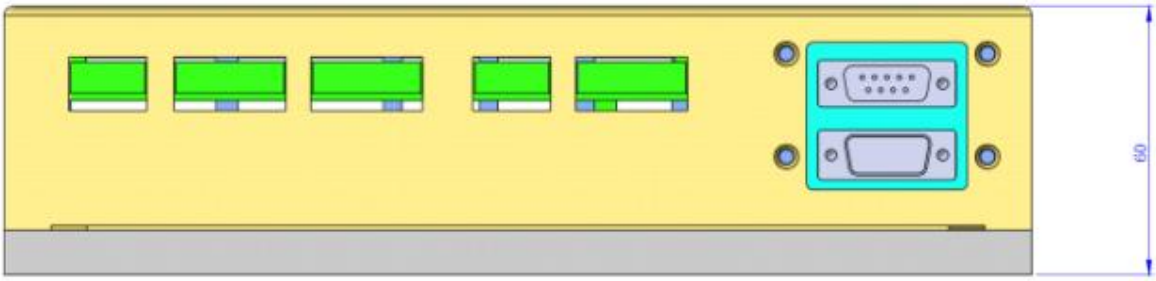

Chapter VI Electrical

6.1 Packing list

List				
S/N	Name	Graphical Representation	Quantity	Remarks
1	Intelligent Double Pendulum Handheld Cleaning Head		1PCS	
2	24V power pack		1PCS	
3	15V power pack		1PCS	
4	Display screen Display screen connecting wire		1PCS	
			1PCS	
5	Handheld laser cleaning system V2		1PCS	
6	Bluetooth antenna		1PCS	
7	Protective glass		4PCS	

6.2 System wiring

The following figure is a schematic diagram for wiring of the whole system. Refer to the schematic diagram for system wiring. Refer to relevant chapters for detailed interface definition.

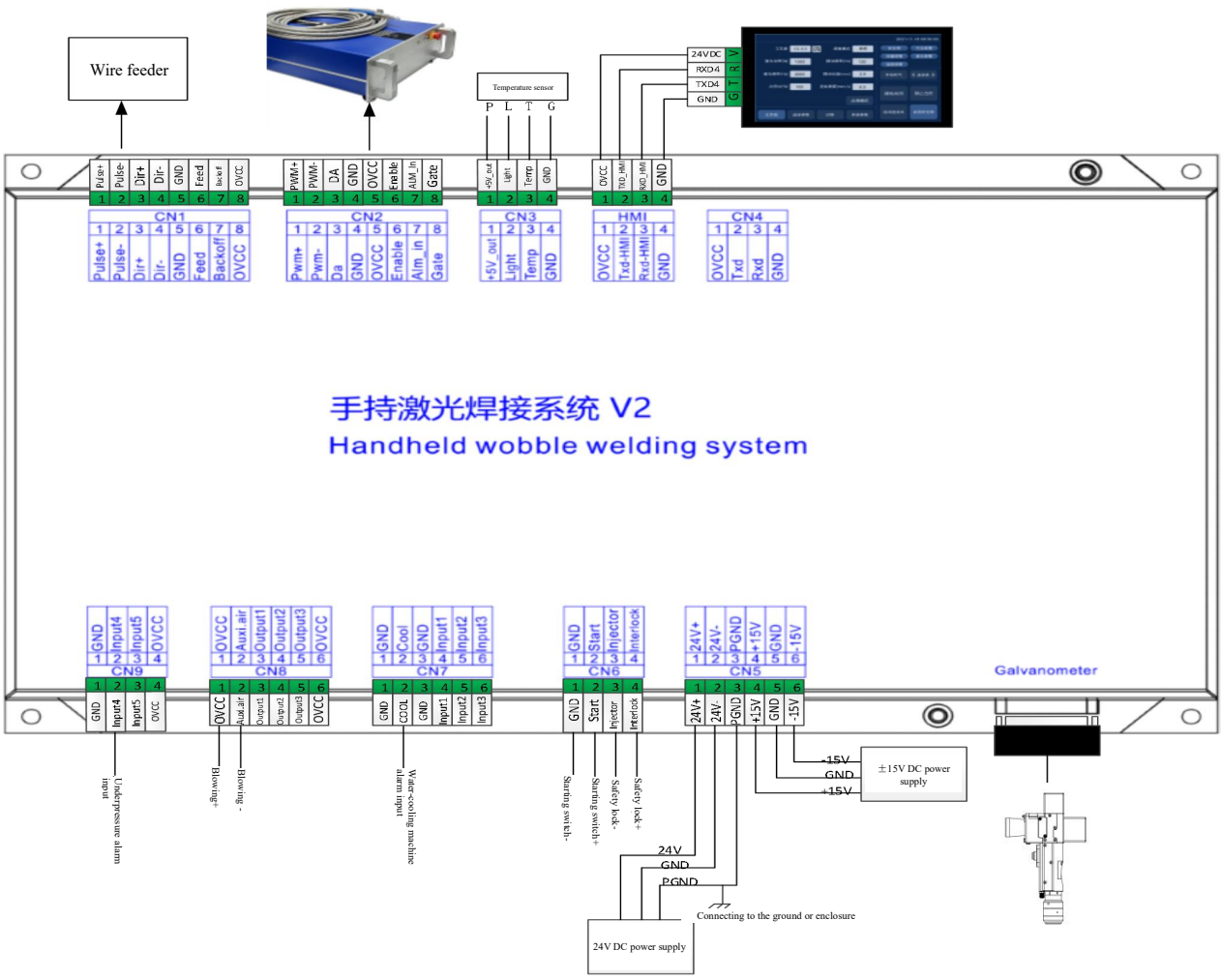

Note:

Don't connect the reserved pin in the mainboard.

6.3 CN5 power supply interface

The power supply interface falls into 6PIN green terminal, providing a power interface for mainboard and galvanometer externally, with voltage: DC 24V (DC 24V) and DC ±15V (DC ±15).

Table 6.3.1 shows the definition of power supply interface.

Table 6.3.1

Pin	Signal	Definition	Instructions
1	24V+	Power supply input	+24V external power input and power supply output current: above 3A
2	24V-	Power reference ground	—
3	PGND	External shielding ground	Generally connecting to ground or enclosure
4	+15V	Power supply input	+15V external power input and power supply output current: above 3A
5	GND	Power reference ground	—
6	-15V	Power supply input	-15V external power input and power supply output current: above 3A

6.4 CN1 wire feeder interface

The wire feeder interface CN1 is a 8PIN green terminal, supporting motor wire feed and IO wire feed. Table 6.4.1 shows the definition of wire feeder interface.

Table 6.4.1

Pin	Signal	Definition	Instructions
1	Pulse+	Motor wire feed pulse + interface	Used for motor wire feed and connection with driver PUL+
2	Pulse-	Motor wire feed pulse - interface	Used for motor wire feed and connection with driver PUL-
3	DIR+	Motor wire feed direction + interface	Used for motor wire feed and connection with driver PUL+

4	DIR-	Motor wire feed direction-interface	Used for motor wire feed and connection with driver Dir-
5	GND	Reference ground	—
6	Feed	Wire feed control interface	Used for automatic wire feed of IO control wire feeder
7	Backoff	Wire withdrawal control interface	Used for automatic wire withdrawal of IO control wire feeder
8	OVCC	+24V power output	Power supply, maximum output: 500mA

6.5 CN2 laser interface

The laser interface is a 8PIN green terminal. Table 6.5.1 shows the definition of laser interface.

Table 6.5.1

Pin	Signal	Definition	Instructions
1	PWM+	Modulating signal+	Duty ratio: 1%-99% (adjustable), 24V level
2	PWM-	Modulating signal-	Duty ratio: 1%-99% (adjustable), 24V level
3	DA	Analog voltage output	0-10V analog voltage, used for laser peak power adjustment
4	GND	Power reference ground	Generally connecting to DA- and Enable-end
5	OVCC	+24V power output	Power supply, maximum output: 500mA
6	Enable	Laser enabling signal	24V level and high level: effective
7	Alarm	Laser failure alarm input	—
8	GATE	Red light index signal	The signal is needed by part of lasers. The function is reserved for use when leaving the factory

6.6 CN3 temperature sensor interface

The temperature sensor interface CN3 is a 4PIN green terminal. Table 6.6.1 shows the definition of temperature sensor. The user directly inserts the supporting connection line with terminal.

Table 6.6.1

Pin	Signal	Definition	Instructions
1	+5V_out	Sensor P interface	+5V power supply, maximum output: 500mA
2	Light	Sensor L interface	—
3	Temp	Sensor T interface	—
4	GND	Sensor G interface	—

6.7 HMI touch screen interface

The HMI interface is a 4PIN green terminal and power supply to and communication with HMI by the mainboard are performed via the port. Table 6.7.1 shows the definition of HMI interface.

Table 6.7.1

Pin	Signal	Definition	Instructions
1	OVCC	+24V power output, 500mA	Panel power supply
2	TXD_HMI	Connecting to the HMI sending end	Serial port communication TXD signal
3	RXD_HMI	Connecting to the HMI receiving end	Serial port communication RXD signal
4	GND	Power reference ground	—

6.8 CN4 reserved serial interface

The reserved serial port CN4 interface falls into 4PIN green terminal, with no connection reserved. Table 6.8.1 shows the definition of CN4 interface.

Table 6.8.1

Pin	Signal	Definition	Instructions
1	OVCC	+24V power output,500mA	Power supply
2	TXD	TXD signal	Serial port communication TXD signal
3	RXD	TXD signal	Serial port communication RXD signal
4	GND	Power reference ground	—

6.9 CN6 external start and safety lock interface

CN6 interface is a 4PIN green terminal. Table 6.9.1 shows the definition of CN6 interface.

Table 6.9.1

Pin	Signal	Definition	Instructions
1	GND	Reference ground	Generally connecting to the start button switch on the welding head-
2	Start	External start switch input	Generally connecting to the start button switch on the welding head+
3	Injector	Safety clamp signal input	The pin must be connected to the safety clamp and the safety clamp shall be clamped onto the metal material before welding.
4	Interlock	Safety clock signal input	The pin must be connected to the nozzle of the handheld head. The nozzle touches the metal material at the moment of welding.

6.10 CN7 common input interface 1

The CN7 interface is a 6PIN green terminal and of NPN type. Table 6.10.1 shows the definition of CN7 interface.

Table 6.10.1

Pin	Signal	Definition	Instructions
1	GND	Reference ground	—
2	Cool	Water-cooling machine alarm input	
3	GND	Reference ground	—
4	Input1	Reserved	—
5	Input2	Reserved	—
6	Input3	Reserved	—

6.11 CN8 common output interface

The CN8 interface is a 6PIN green terminal. The OC output can be

used to directly drive the relay and the maximum current can reach to 500mA. Table 6.11.1-Schematic Diagram for Wiring is as follows:

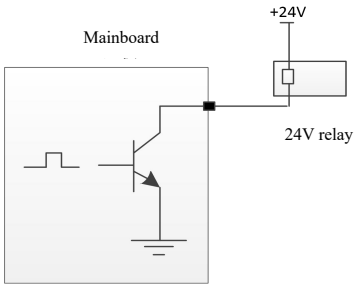

Schematic Diagram for Output Port

Table 6.11.1

Pin	Signal	Definition	Instructions
1	OVCC	+24V power output	Power supply, maximum output: 500mA
2	Auxi.air	Protective gas	Used for protective gas blowing control
3	Output1	Green light	—
4	Output2	Red light	—
5	Output3	Buzzer	—
6	OVCC	+24V power output	Power supply, maximum output: 500mA

6.12 CN9 common input interface 2

The CN9 interface is a 4PIN green terminal. Table 6.12.1 shows the definition of CN9 interface.

Table 6.12.1

Pin	Signal	Definition	Instructions
1	GND	Reference ground	—
2	Input4	Underpressure alarm input	
3	Input5	Reserved	—
4	OVCC	+24V power output	Power supply, maximum output: 500mA

6.13 Galvanometer interface

The system provides two DB9 galvanometer interfaces, one DB9 male and one DB9 female.

Chapter VII Introduction to HMI Operation

7.1 Introduction to HMI function

As for the handheld laser welding system operation panel (hereinafter referred to as "HMI"), the 7cun configuration TFT touch screen is used, with beautiful interface and convenient operation. The laser-related parameters can be set, respectively and the real-time display of input/output IO state, alarm information and running state can be realized on the main interface.

Refer to the following figure for the HMI main interface.

Main interface of HMI

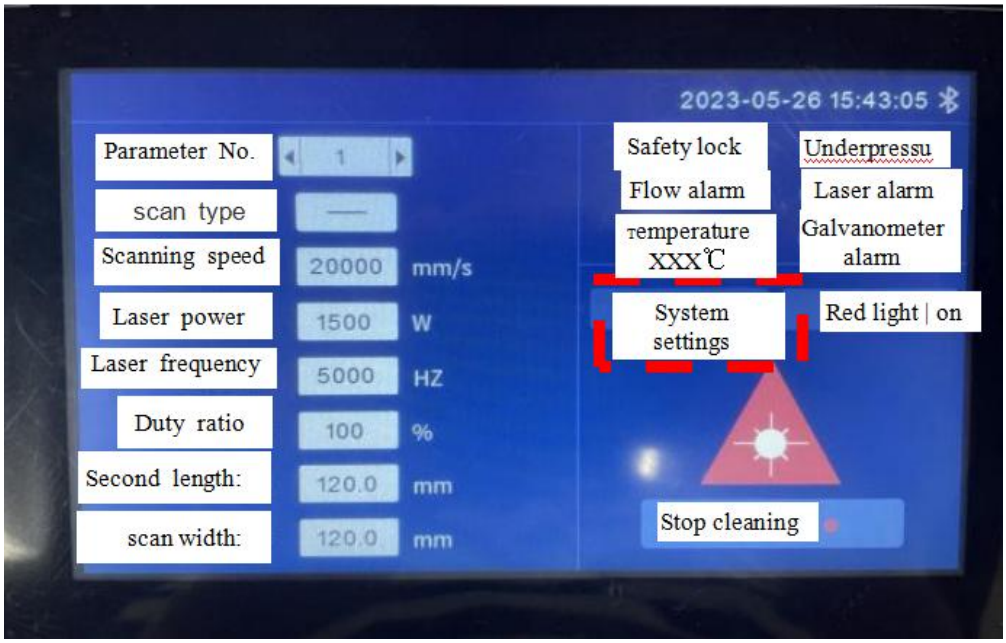

[Bluetooth mark]: Display whether the bluetooth matching connection between the equipment and the mobile terminal is conducted.

[Scanning parameter]: Used to set the parameters related to the scanning processing of the galvanometer.

Parameter number: Multiple groups of different cleaning parameters can be set with different parameter numbers.

Scanning speed: It is used to set the scanning speed of the galvanometer.

Laser power: It is used to set the percentage of the peak power of the laser.

Laser frequency: It is used to set the PWM frequency of the laser.

Duty ratio: It is used to set PWM signal duty ratio of continuous laser.

Scanning length: It is used to set the length of the laser scan.

[System Settings]: Click to enter the system setting page and modify system function parameters.

[scan width]: Used to set the length of laser scanning.

[Alarm State Area]: After the alarm signal is enabled, the real-time display of protective gas underpressure alarm, cold water flow alarm, laser alarm and temperature alarm, and galvanometer state is conducted. The real-time display of safety lock state will arise when the safety lock is enabled; When the alarm signal isn't triggered, the corresponding alarm state will turn into blue; When the alarm occurs, the corresponding alarm icon will flicker between red light and blue light.

[Red light | switch on/off]: The red light switch can control the switch of the laser red light indication.

[preparation \ stop | cleaning]: Emission of laser can be allowed or forbidden by the button. In a state ready to clean, press the cleaning start button will be laser cleaning; Under the stop cleaning state, press the cleaning start button will not produce light cleaning.

7.2 System parameter setting.

System parameter setting: The modification takes effect after being saved.

Double click light extraction enabling: Switch off the enabling function. Click the button once and the laser will come out. Switch on the enabling function. Double click the button twice and the laser will come out.

Delay in enabling gas: Delay in enabling gas can be set when processing is enabled. The emission of laser will start after blowing is delayed for a period of time by pressing the external start button.

Delay in disenabling gas: Delay in disenabling gas can be set when processing is disenabled. Stop blowing after stopping laser emission, and then delaying for a period of time when processing is stopped.

Scale factor: This parameter is used to set the maximum range of the galvanometer. The value must be consistent with the actual range of the galvanometer; otherwise, the actual length and width of the light output may be inaccurate.

Enabling the safety lock: Select whether to enable security lock protection.

[Chinese/English]: Switch between Chinese and English languages.

Automatic screen lock: When the automatic screen lock is enabled, the system automatically switches to the screen lock page when no operations are performed on the touchscreen after a period of time.

[Authorization]: Perform authorization code reading and decryption operations, and display the information about the panel and mainboard version numbers.

7.3 Equipment parameters

[Equipment parameters]: It is used to limits the maximum and minimum parameters. This parameter limits the laser parameters, only by entering the password to enable it. After the parameter is changed, it must be saved to take effect.

Maximum scanning speed: It is used to set the maximum oscillating speed of the galvanometer

Minimum scanning speed: It is used to set the minimum oscillating speed of the galvanometer

Maximum scanning length: It is used to set the maximum scanning length allowed by the equipment

Minimum scanning speed: It is used to set the minimum scanning length allowed by the equipment

Laser rated power: It is used for setting the rated power of the laser.

Maximum laser frequency: It is used to set the maximum laser frequency

Minimum laser frequency: It is used to set the minimum laser frequency

Laser alarm enabling: It is used to set whether to enable laser alarm. If this parameter is enabled, a laser alarm will be generated when the laser alarm input triggers the alarm.

Laser alarm level: It is used to set the laser alarm that triggers the electrical level logic.

Water-cooling machine alarm enabling: It is used to set whether to enable water-cooling machine. If this parameter is enabled, a water-cooling machine will be generated when the water-cooling machine input triggers the alarm.

Water-cooling machine alarm level: It is used to set the water-cooling machine that triggers the electrical level logic.

Underpressure alarm enabling: It is used to set whether to enable underpressure alarm. If this parameter is enabled, an underpressure alarm will be generated when the underpressure alarm input triggers the alarm.

Underpressure alarm level: It is used to set the underpressure alarm that

triggers the electrical level logic.

Temperature alarm enabling: It enables the lens temperature alarm. When the temperature exceeds the limit value, an alarm signal will be generated.

Temperature alarm limit: Lens temperature limit value.

7.4 Alarm message

Alarm information includes: Safety clamp alarm and machine alarm.

Safety clamp alarm lies in that the safety clamp and cleaning head is not reliable conduction.

Machine alarm includes 3 alarms, laser alarm, water-cooling machine alarm, underpressure alarm. In the alarm information interface, it can display multiple alarm information, up to 3 pages, and it can switch through the previous page and the next page.

When the alarm is triggered, the output of the laser will be stopped and the galvanometer will stop moving at the same time, and the corresponding alarm information will be prompted. The user can check the related hardware problems according to the alarm prompt and remove the alarm. When the alarm is lifted, the alarm record of the machine alarm will still exist in the alarm information. At this time, you can manually clear the alarm by entering the alarm information interface. If the alarm is not lifted, the alarm will continue to prompt when it is manually cleared.

Chapter VIII Processing Module Switching

8.1 Selection of processing type

As for the welding mode switching to 300mm cleaning mode, inputting password-666666 will be reminded by clicking [Processing Type] on the panel pursuant to [System Parameter]->[Authorization]->[Processing Type]. After the password is put correctly, enter the system type selection interface, as shown in the figure:

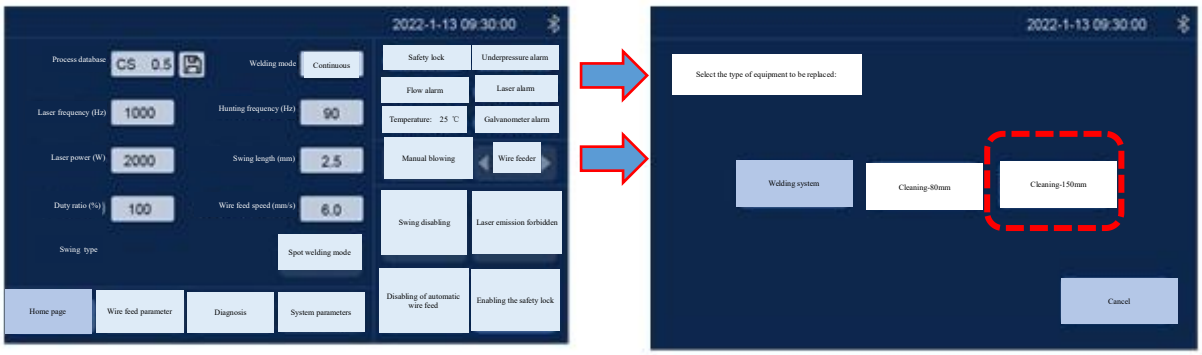

8.2 Hint of module replacement

After the user chooses the processing type, the system shall use the text and picture for prompting for the gun head component to be replaced. The system will remind power-on anew by clicking [Confirm] after the user confirms the corresponding hardware components and replacement conditions. The equipment is powered down by the use interface to replace the corresponding component.

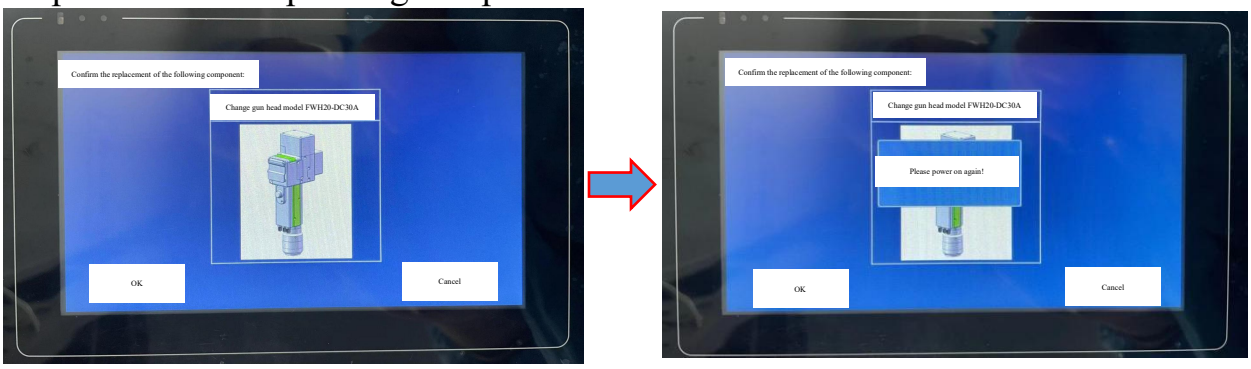

8.3 Switch completion

After the replacement of hardware component by the user is over, the equipment can be powered on anew. Whether you confirm the replacement of the hardware component will be reminded again at the moment. The user shall click [Confirm] after confirming the replacement of component is over and the system processing mode switch will be over.

Warm tips: After replacing a component, the system prompts you to confirm for the second time.

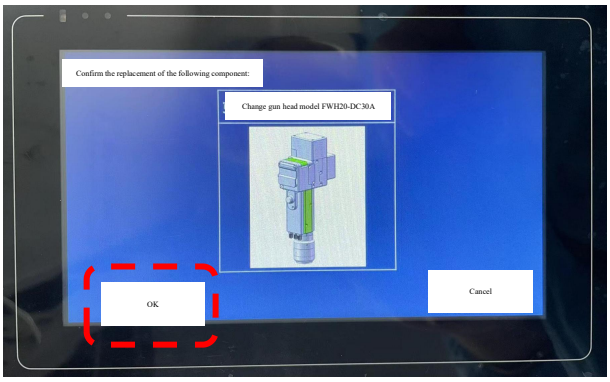

8.4 System parameters

The user needs to set parameters before using. Click [System Parameters] to set.

Double click light extraction enabling: The enabling is opened, double click the button for twice to extract light, close the enabling button, click once to extract light.

Scale factor: X system parameter is changed to 680;

Y system parameter is changed to 750.

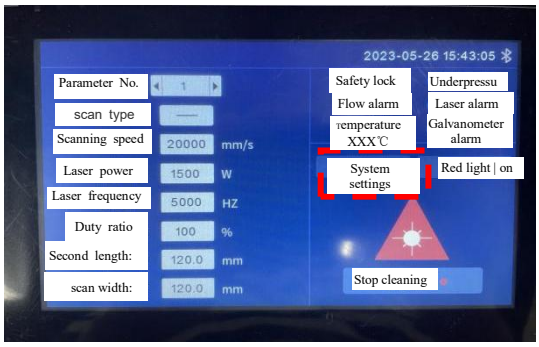

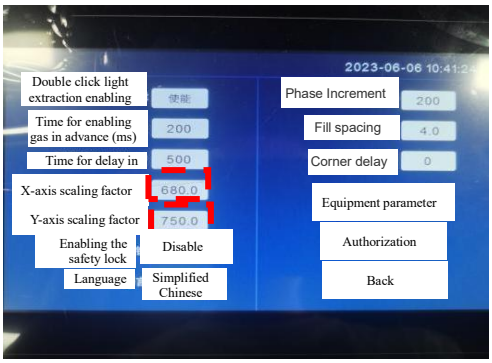

Chapter IX Monitoring and Protection Device

9.1 Temperature parameter setting of protective glass

[Home Page]→[System Parameter]→[Equipment Parameter]→[Input Password: 666888] →next page→ lens temperature alarm limit value.

It is suggested to set the set value of lens temperature to 50. After the lens temperature exceeds the set value, the alarm caution will arise on the home page and the display light on the side of the handheld plumb joint will turn to red.

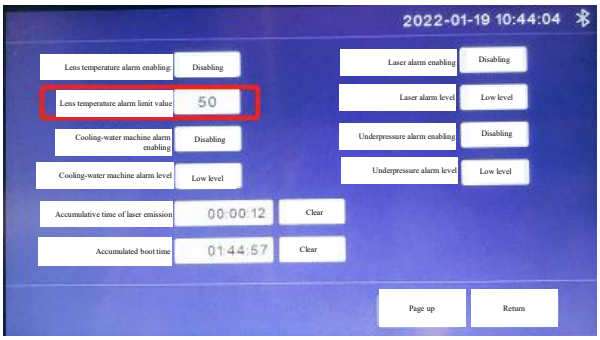

9.2 Bluetooth APP monitoring

In case of use for the first time, it is necessary to download the Farguard applet which can be used to contact the after-sales customer service personnel. Note: The APP now only supports the mobile phone with Android operating system. The applet icon is as follows:

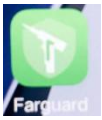

Monitoring home screen, welding system, cleaning system and selection as per the use category.

The current usage can be viewed by the equipment state page.

Home screen	Equipment status
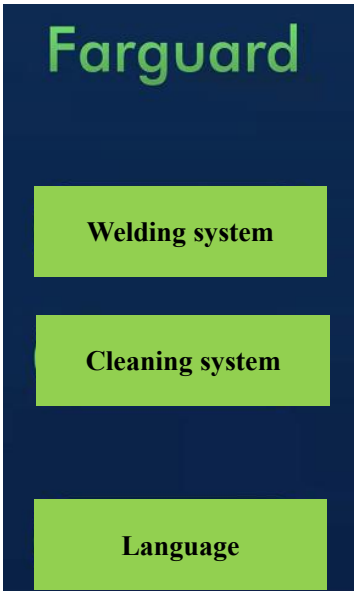	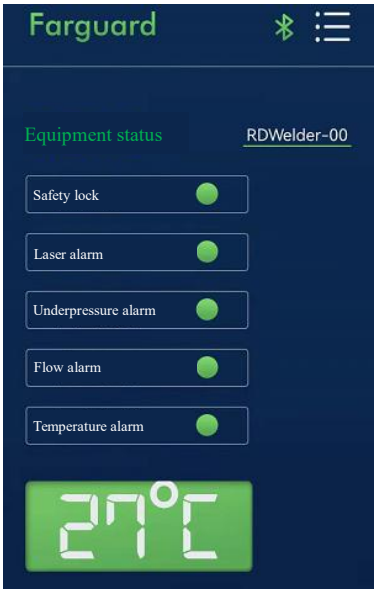

Shenzhen RelFar Intelligent Technology Co., Ltd.

Thank you for using the intelligent technology product of Shenzhen RelFar!

Website: www.relfar.com

Tel.: 0755-23143635

Address: Factory, Area B, Haiweijingsong, Lusiyuan 1 District, Qiaohe Road, Heping Community, Fuhai Sub-district, Bao'an District, Shenzhen City, Guangdong Province