FWH20-D11C Intelligent Double Pendulum Handheld Plumb Joint

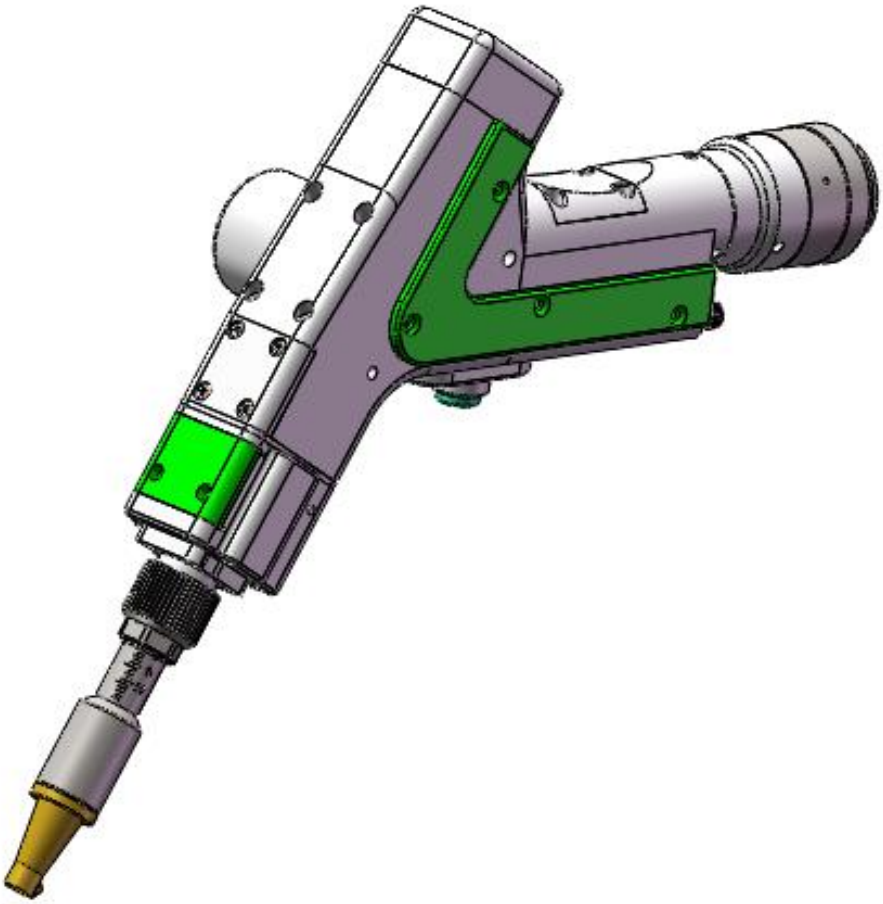

Shenzhen RelFar Intelligent Technology Co., Ltd.

Website: www.relfar.com

Tel.: 0755-23143635

Address: Block E, Area I, Siyuan Industrial Park, Heping Community, Fuhai Street, Bao'an District, Shenzhen City, Guangdong Province

Date of issue: Sep. 27, 2023 Version: A

Foreword

Thank you for choosing our products!

To enable you to have an overall understanding of our company, there is a detailed introduction regarding features, structural features, technical parameters, instructions for use and maintenance of the product in the Manual. Before using this product, please read this Manual carefully, which will help you to use it better.

Due to constant update of product functions, the product you received may differ from the description in the Manual. We hereby express our deep sorry for this matter! During use, in case of any question, please timely call us for consultation, and we will offer dedicated service to you wholeheartedly.

CONTENTS

1.1 Product parameter 5

1.2 Precautions 5

Chapter II Structural Characteristics 6

2.1 Product structure 6

Chapter III Product Installation 7

3.1 Pipe connection 7

3.1.1 Cooling water: The 6mm air tube is connected. The main function is that the excess heat is taken away by cooling through the internal structural member water route when the heat is produced by the light path in the cavity to ensure the welding performance. The series connection of cooling water pipeline is required, with one-in and one-out water circulation connected. 7

3.1.2 Protective gas: The 6mm air tube is connected for butt welding gas protection, with input pressure＜1Mpa. 8

3.2 Optical fiber input installation 8

Chapter IV Maintenance 10

4.1 Structure of optics lens 10

4.2 Cleaning of optics lens 11

4.3 Disassembly and assembly of optics lens 12

4.3.1 Disassembly and assembly of collimation lens 12

4.3.2 Disassembly and assembly of focus lens 13

4.3.3 Disassembly and assembly of protective glass 14

Chapter V Welding System 16

5.1 Installation dimension drawing for product 16

5.1.1 Installation dimension of touch screen 16

External dimension (209.5*150*24)mm 16

5.1.2 Installation dimension of main board 17

Chapter VI Electrical 18

6.1 Table for Electrical Materials 18

6.2 System wiring 19

6.3 CN5 power supply interface 20

6.4 CN1 wire feeder interface 20

6.5 CN2 laser interface 21

6.6 CN3 temperature sensor interface 22

6.7 HMI touch screen interface 22

6.8 CN4 reserved serial interface 22
6.9 CN6 external start and safety lock interface 23
6.10 CN7 common input interface 1 24
6.11 CN8 common output interface 24
6.12 CN9 common input interface 2 25
6.13 Galvanometer interface 25
Chapter VII Introduction to HMI Operation 26
7.1 Introduction to HMI function 26
7.2 Introduction to HMI operation 27
7.2.1 Parameter setting: 27
7.2.2 [System parameter]: Used to set the basic parameters of the equipment, configured by the manufacturer generally. The passport needs to be input before entering the page. 28
7.2.3 [Wire feeding parameter]: Used to set the wire feed parameters, such as wire supplement parameter and wire withdrawal parameter. 29
7.2.4 [Equipment parameter]: Used to set relevant parameters of the equipment. 30
Chapter VIII Monitoring and Protection Device 31
8.1 Temperature parameter setting of protective glass 31
8.2 Bluetooth APP monitoring 31
Chapter IX Replacement of Cleaning Module 33
9.1 Replacement of structure 33
9.3 Installation and replacement 34
10.1 Selection of processing type 35
10.2 Hint of module replacement 35
10.3 Switch completion 36
Chapter XI Welding Seam Cleaning and Replacement 37
11.1 The schematic diagram for replacement of structure is as follows 37
11.2 System switching 37

Chapter I Overview

1.1 Product parameter

Name	Intelligent double pendulum handheld plumb joint
Model	FWH20-D11C
Fiber interface	QBH
Wavelength scope	1,070±20nm
Rated power	≦3,000W
Collimation focal length	50mm
Focus focal length	150mm
Swing type	—、○、∞、⧖、◎、△
Regulating scope of focal point	-10mm~+10mm
Regulating scope of light spot	0~5mm
Auxiliary pressure	≤1Mpa
Weight	0.8Kg

1.2 Precautions

※ To ensure personal safety, wear the special fiber laser protective glasses before operation.

※ It is necessary to keep the product clean and prevent the cooling liquid, condensate water or other foreign matter from intruding into the cavity, or the functional contamination and functional impact of related parts will be incurred.

Chapter II Structural Characteristics

2.1 Product structure

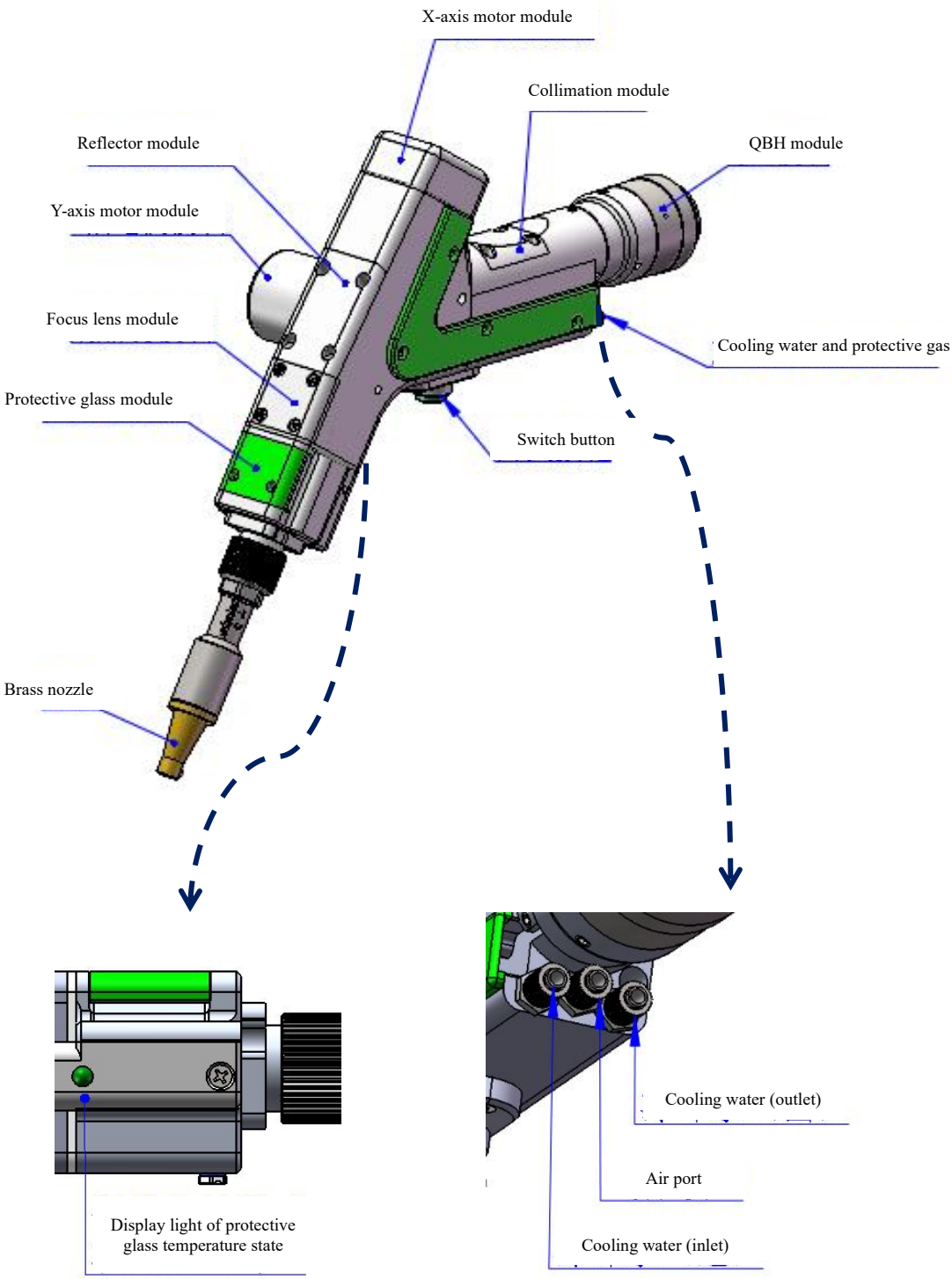

Chapter III Product Installation

3.1 Pipe connection

Cooling water circuit and auxiliary protective gas connection

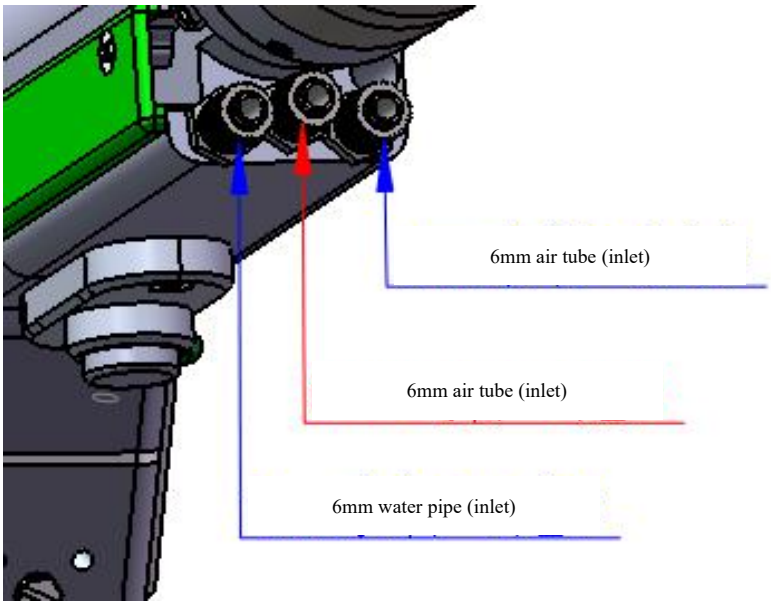

Connection of cooling water and shielding gas and usage requirements:

Note: Regularly used gases: Compressed air (oil-water filtration required)

Regularly used gases are: argon, nitrogen and compressed air (oil-water filtration required).

3.1.1 Cooling water: The 6mm air tube is connected. The main function is that the excess heat is taken away by cooling through the internal structural member water route when the

heat is produced by the light path in the cavity to ensure the welding performance. The series connection of cooling water pipeline is required, with one-in and one-out water circulation connected.

3.1.2 Protective gas: The 6mm air tube is connected for butt welding gas protection, with input pressure＜1Mpa.

3.2 Optical fiber input installation

※ The QBH is a horizontal arrangement to take out the dustproof seal cover.

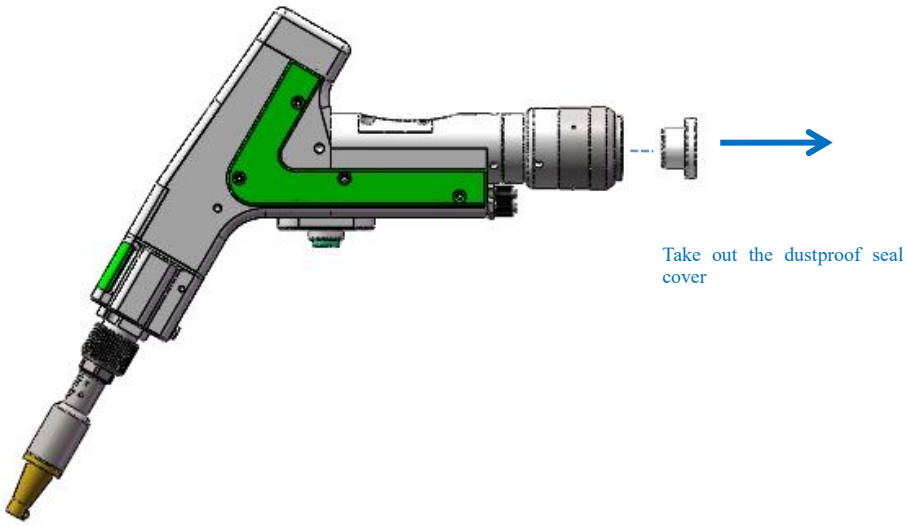

※ Align the red dot on the fiber optic head with the QBH red dot, and slowly insert the fiber optic head into the QBH.

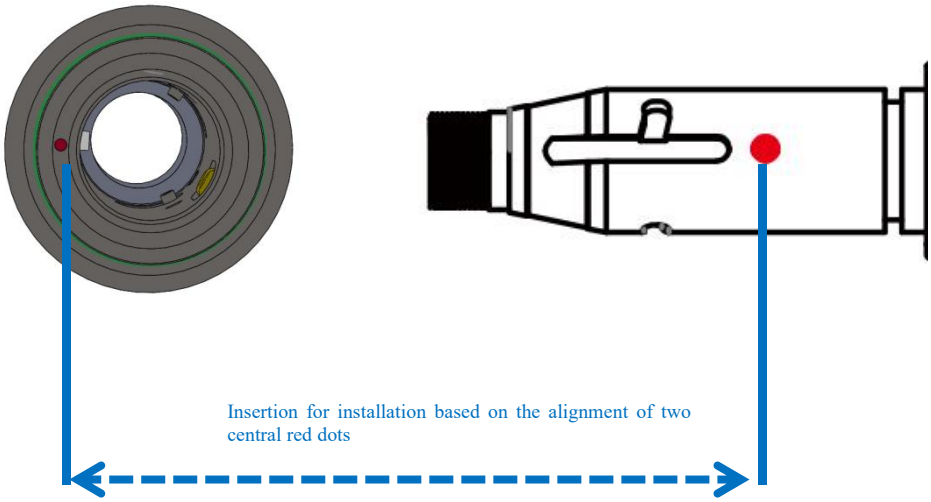

※ The QHB is screwed to the locking state: Rotate it to the limiting position clockwise (hearing the "click"), lift up the rotating mantle, and clockwise rotate the mantle until the head of optical fiber is compressed.

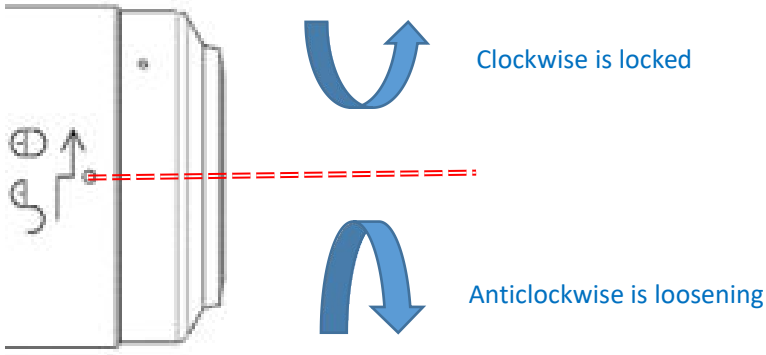

Chapter IV Maintenance

4.1 Structure of optics lens

※ The assembly is completed in the dust-free plant at the time of replacement of parts. In principle, other modules are forbidden to be dismounted except that the protective glass drawer can be disassembled and assembled. If it is necessary to check the collimating lens, focus lens and galvanometer lens, the product shall be put into a clean environment for disassembly.

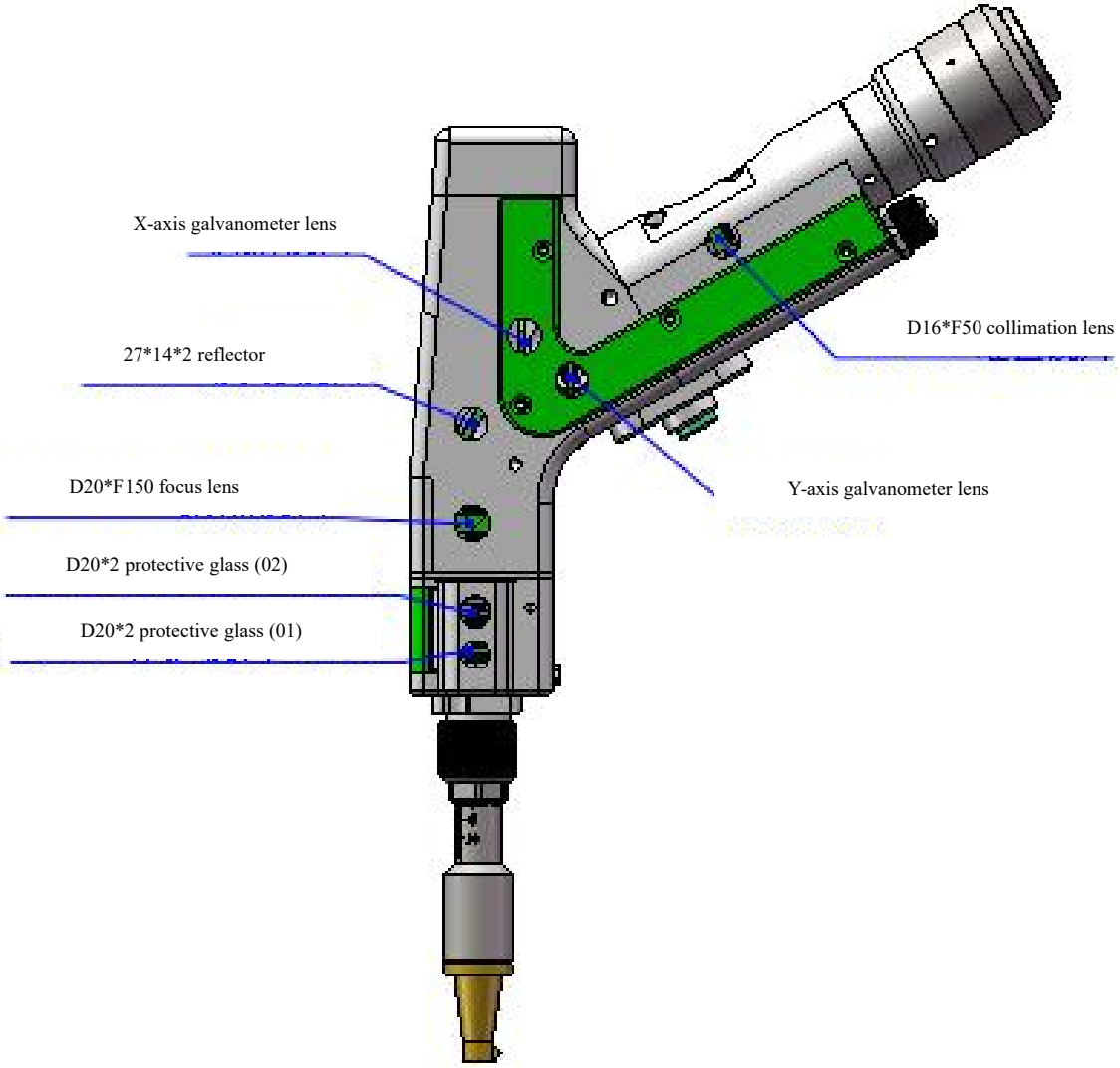

4.2 Cleaning of optics lens

※ When the optics lens are cleaned, the operation method and attention points are as follows:

※ Tools: Dust-free gloves or dust-free fingerstall, dust-free wiping cotton swab, isopropyl alcohol, and caned dry and pure compressed air.

※ Spray the isopropyl alcohol onto the dust-free cotton swab, align the lens to eyes, gently pinch the side edge of the lens with left thumb and index finger and hold the dust-free cotton swab with right hand to gently wipe the front and back of the lens in a single direction from bottom to top or from left to right (avoid wiping back and forth to avert the secondary contamination of lens), blow the surface of the lens with filling dry and pure compressed air and confirm the surface of lens is free from foreign matters after cleaning.

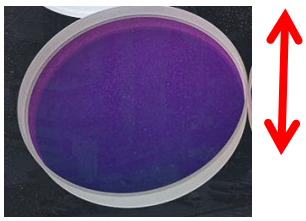

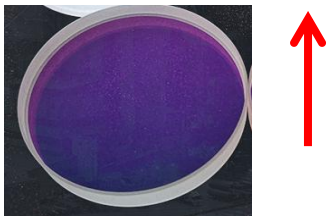

4.3 Disassembly and assembly of optics lens

4.3.1 Disassembly and assembly of collimation lens

Tools: 2mm inner-hexagon wrench, dust-free cotton swab, alcohol

※ The disassembly and assembly shall be completed in a clean place. When the lens are dismounted, the dust-free gloves or dust-free fingerstall.

※ Disassembly and assembly steps:

Step 1: Clean up all the dust on the surface of the laser head firstly.

Step 2: Loosen the M2.5 hex socket head cap screw in the figure by hand with a 2mm hex wrench.

Step 3: Remove the collimation handle horizontally, and pull out the collimation drawer module.

Step 4: Seal the port with textured paper to prevent the dust from entering the cavity, resulting in pollution.

Step 5: Rotate the gland for 90° after pressing it downward gently and take out the gland by two bosses aligning to left/right opening to replace the collimation lens.

(Note: orientation of installed lens in the concave and convex direction)

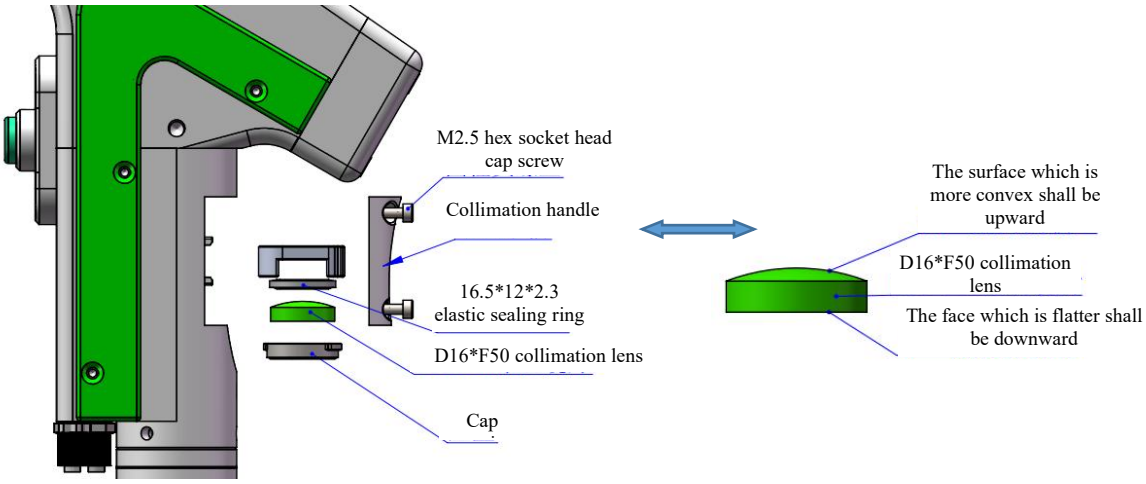

4.3.2 Disassembly and assembly of focus lens

Tools: 2mm hexagon key wrench, dust-free cotton swab, ethyl alcohol and masking tape

※ The disassembly and assembly shall be completed in a clean place. When the lens are dismounted, the dust-free gloves or dust-free fingerstall.

※ Disassembly and assembly steps:

Step 1: Loosen the M2.5 hex socket head cap screw in the figure by hand with a 2mm hex wrench.

Step 2: Take out the focus drawer module by direct drawing/pulling in the horizontal direction.

Step 3: Seal the port with textured paper to prevent the dust from entering the cavity, resulting in pollution.

Step 4: Rotate the gland for 90° after pressing it downward gently and take out the gland by two bosses aligning to left/right opening to replace the focus lens.

(Note: orientation of installed lens in the concave and convex direction)

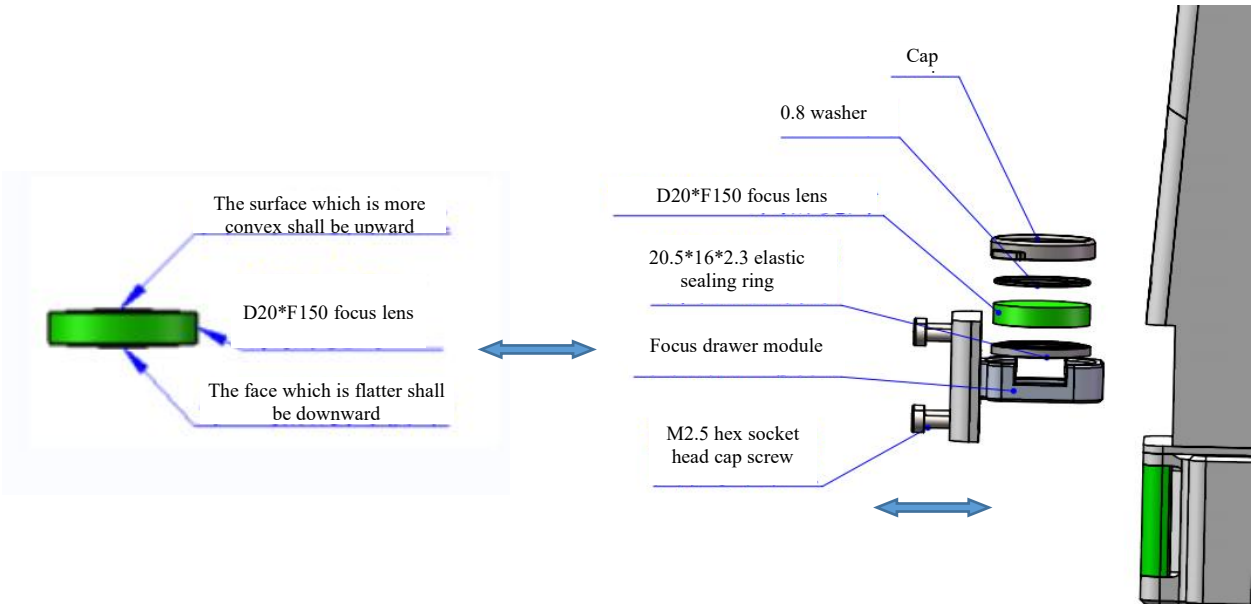

4.3.3 Disassembly and assembly of protective glass

※ The disassembly and assembly shall be completed in a clean place. When the lens are dismounted, the dust-free gloves or dust-free fingerstall.

Replace the protective glass 01

Step 1: hold both sides of the handle of the green drawer module 1 with hands to draw out the protective glass in the horizontal direction. Pay attention to dust prevention and seal the exposed window on the cavity with textured paper to prevent the dust from entering the cavity, resulting in pollution, and then replace the protective glass.

Step 2: Gently press the gland down for 90° rotation, and loosen it when two lugs align to two notches to take out the gland to replace the protective glass.

Replace the protective glass 02

Step 1: Take out the green drawer handle module 1 to take out the handle module 2 in the horizontal direction. Pay attention to dust prevention and seal the exposed window on the cavity with textured paper to prevent the dust from entering the cavity, resulting in pollution, and then replace the protective glass. Gently press the gland down for 90° rotation, and loosen it when two lugs align to two notches to take out the gland to replace the protective glass.

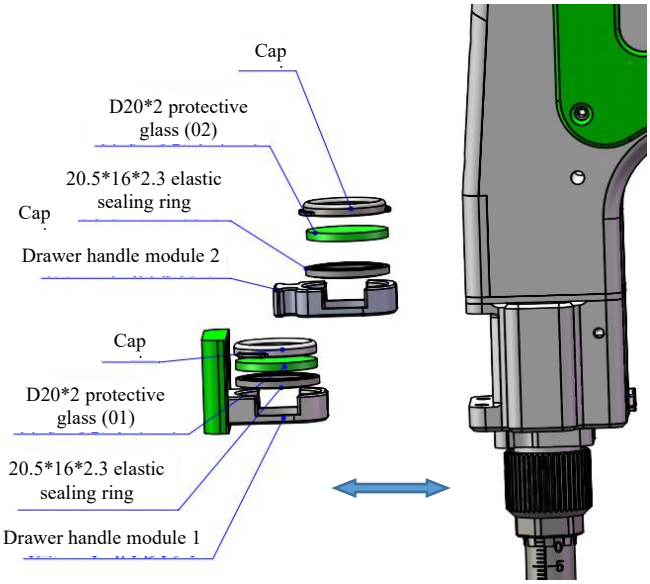

Chapter V Welding System

5.1 Installation dimension drawing for product

5.1.1 Installation dimension of touch screen

External dimension (209.5*150*24)mm

The installation dimension of the touch screen is shown in the following figure:

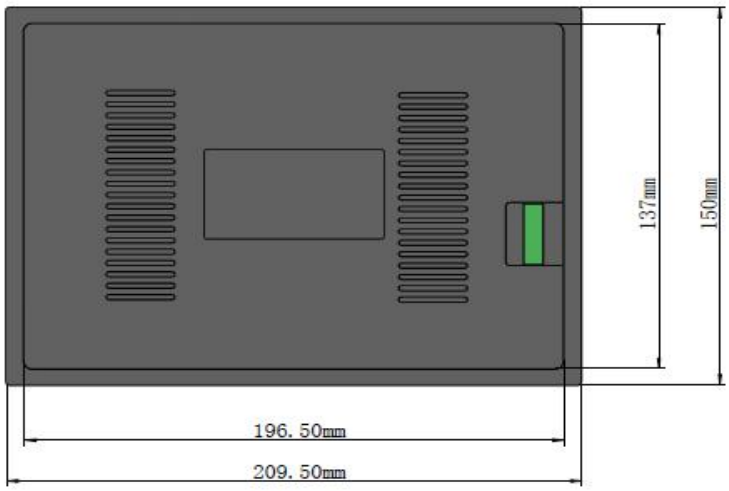

Rear view

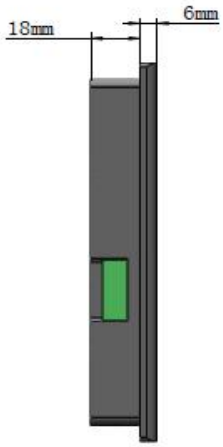

Left view

Top view

5.1.2 Installation dimension of main board

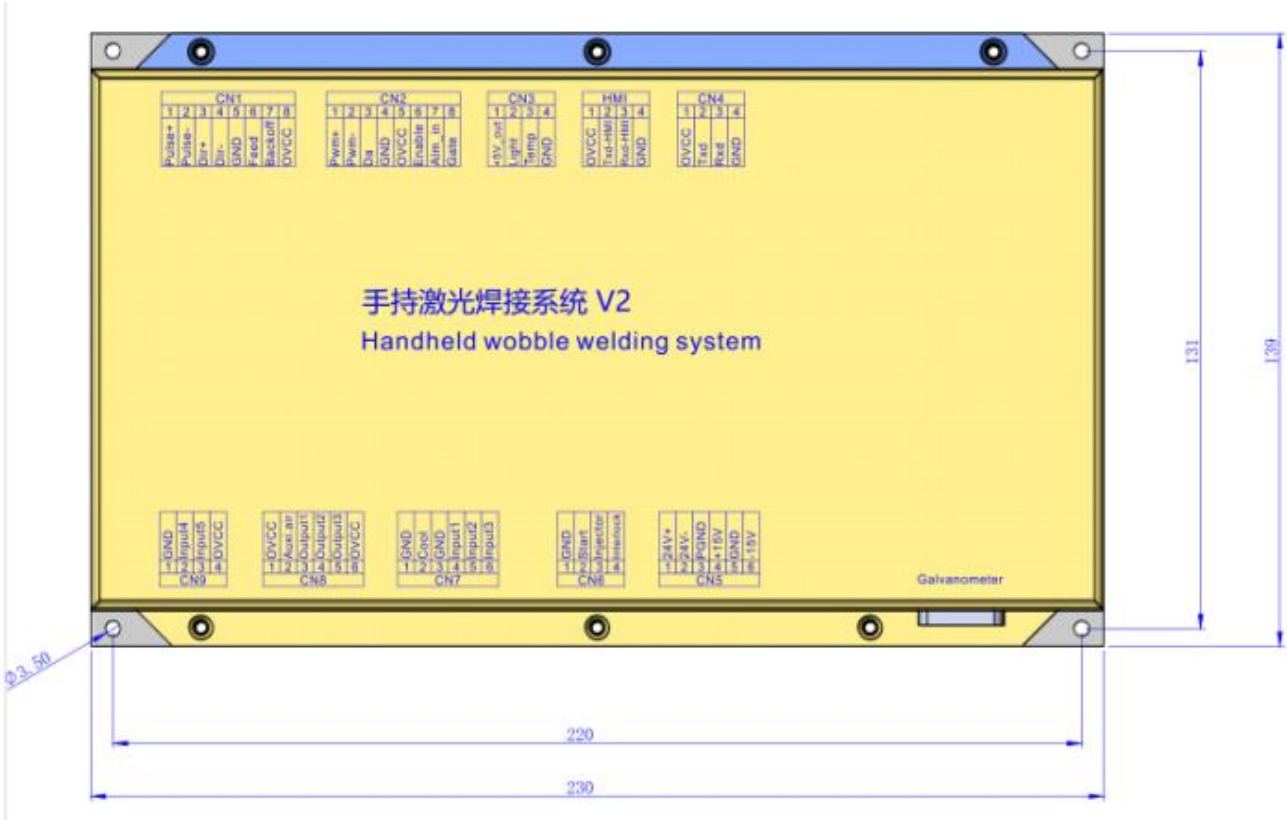

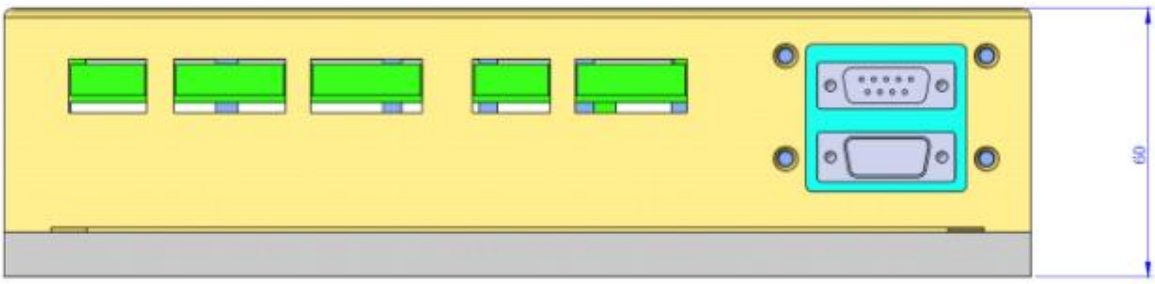

Chapter VI Electrical

6.1 Table for Electrical Materials

List				
S/N	Name	Illustration	Quantity	Remarks
1	Intelligent double pendulum handheld plumb joint		1PCS	
2	24V power pack	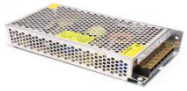	1PCS	
3	15V power pack		1PCS	
4	Ground clamp component		1PCS	
5	Display screen		1PCS	
6	Touch screen 4-core connecting line-1.5m-black		1PCS	
7	Bluetooth antenna		1PCS	
8	Handheld laser welding system V2		1PCS	

6.2 System wiring

The following figure is a schematic diagram for wiring of the whole system. Refer to the schematic diagram for system wiring. Refer to relevant chapters for detailed interface definition.

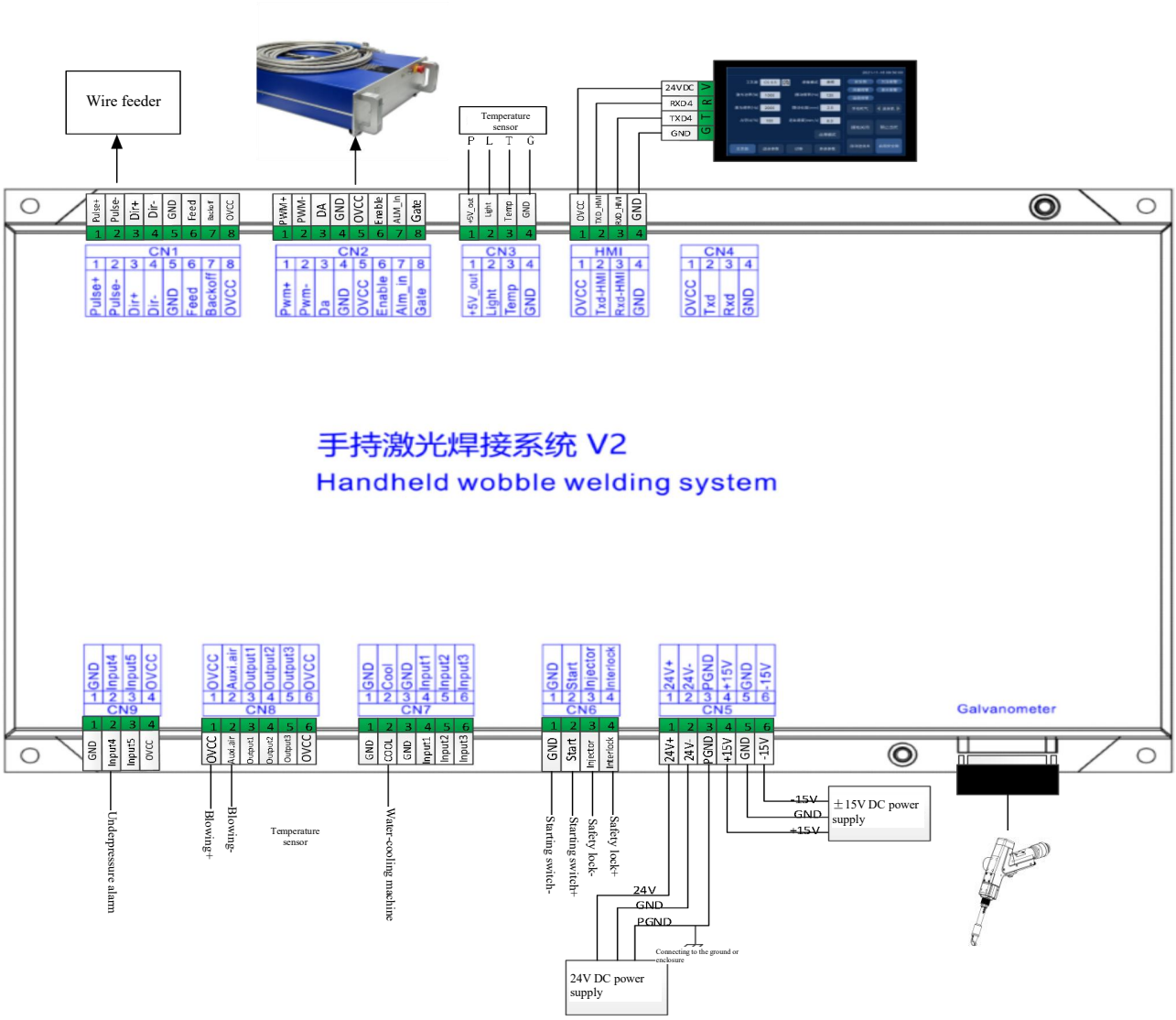

Note:
Don't connect the reserved pin in the mainboard.

6.3 CN5 power supply interface

The power supply interface falls into 6PIN green terminal, providing a power interface for mainboard and galvanometer externally, with voltage: DC 24V (DC 24V) and DC ±15V (DC ±15).

Table 6.3.1 shows the definition of CN5 power supply interface.

Table 6.3.1

Pin	Signal	Definition	Description
1	24V+	Power supply input	+24V external power input and power supply output current: above 3A
2	24V-	Power reference ground	—
3	PGND	External shielding ground	Generally connecting to ground or enclosure
4	+15V	Power supply input	+15V external power input and power supply output current: above 3A
5	GND	Power reference ground	—
6	-15V	Power supply input	-15V external power input and power supply output current: above 3A

6.4 CN1 wire feeder interface

The wire feeder interface CN1 is a 8PIN green terminal, supporting motor wire feed and IO wire feed. Table 6.4.1 shows the definition of wire feeder interface.

Table 6.4.1

Pin	Signal	Definition	Description
1	Pulse+	Motor wire feed pulse + interface	Used for motor wire feed and connection with driver PUL+
2	Pulse-	Motor wire feed pulse	Used for motor wire feed and connection

		- interface	with driver PUL-
3	DIR+	Motor wire feed direction + interface	Used for motor wire feed and connection with driver PUL+
4	DIR-	Motor wire feed direction - interface	Used for motor wire feed and connection with driver Dir
5	GND	Reference ground	—
6	Feed	Wire feed control interface	Used for automatic wire feed of IO control wire feeder
7	Backoff	Wire drawing control interface	Used for automatic wire feed of IO control wire drawing
8	OVCC	+24V power output	Power supply, maximum output is 500mA

6.5 CN2 laser interface

The laser interface is a 8PIN green terminal. Table 6.5.1 shows the definition of laser interface.

Table 6.5.1

Pin	Signal	Definition	Description
1	PWM+	Modulating signal+	Duty ratio: 1%-99% (adjustable), 24V level
2	PWM-	Modulating signal-	Duty ratio: 1%-99% (adjustable), 24V level
3	DA	Analog voltage output	0-10V analog voltage, used for laser peak power adjustment
4	GND	Power reference ground	Generally connecting to DA- and Enable-end
5	OVCC	+24V power output	Power supply, maximum output is 500mA
6	Enable	Laser enabling signal	24V level and high level: effective
7	Alarm	Laser failure alarm input	—
8	GATE	Red light index signal	The signal is needed by part of lasers. The function

			is reserved for use when leaving the factory

6.6 CN3 temperature sensor interface

The temperature sensor interface CN3 is a 4PIN green terminal. Table 6.6.1 shows the definition of temperature sensor. The user directly inserts the supporting connection line with terminal.

Table 6.6.1

Pin	Signal	Definition	Description
1	+5V_out	Sensor P interface	+5V power supply, maximum output is 500mA
2	Light	Sensor L interface	—
3	Temp	Sensor T interface	—
4	GND	Sensor G interface	—

6.7 HMI touch screen interface

The HMI interface is a 4PIN green terminal and power supply to and communication with HMI by the mainboard are performed via the port. Table 6.7.1 shows the definition of HMI interface.

Table 6.7.1

Pin	Signal	Definition	Description
1	OVCC	+24V power output, 500mA	Panel power supply
2	TXD_HMI	Connecting to the HMI sending end	Serial port communication TXD signal
3	RXD_HMI	Connecting to the HMI receiving end	Serial port communication RXD signal
4	GND	Power reference ground	—

6.8 CN4 reserved serial interface

The reserved serial port CN4 interface falls into 4PIN green terminal, with no connection reserved. Table 6.8.1 shows the definition of CN4 interface.

Table 6.8.1

Pin	Signal	Definition	Description
1	OVCC	+24V power output, 500mA	Power supply
2	TXD	TXD signal	Serial port communication TXD signal
3	RXD	TXD signal	Serial port communication RXD signal
4	GND	Power reference ground	—

6.9 CN6 external start and safety lock interface

CN6 laser interface is a 4PIN green terminal. Table 6.9.1 shows the definition of CN6 interface.

Table 6.9.1

Pin	Signal	Definition	Description
1	GND	Reference ground	Generally connecting to the start button switch on the welding head-
2	Start	External start switch input	Generally connecting to the start button switch on the welding head+
3	Injector	Safety clamp signal input	The pin must be connected to the safety clamp and the safety clamp shall be clamped onto the metal material before welding.
4	Interlock	Safety clock signal input	The pin must be connected to the nozzle of the handheld head. The nozzle touches the metal material at the moment of welding.

6.10 CN7 common input interface 1

The CN7 interface is a 6PIN green terminal and of NPN type. Table 6.10.1 shows the definition of CN7 interface.

Table 6.10.1

Pin	Signal	Definition	Description
1	GND	Reference ground	—
2	Cool	Water-cooling machine alarm input	
3	GND	Reference ground	—
4	Input1	Reserved	—
5	Input2	Reserved	—
6	Input3	Reserved	—

6.11 CN8 common output interface

The CN8 interface is a 6PIN green terminal. The OC output can be used to directly drive the relay and the maximum current can reach to 500mA. Table 6.11.1-Schematic Diagram for Wiring is as follows:

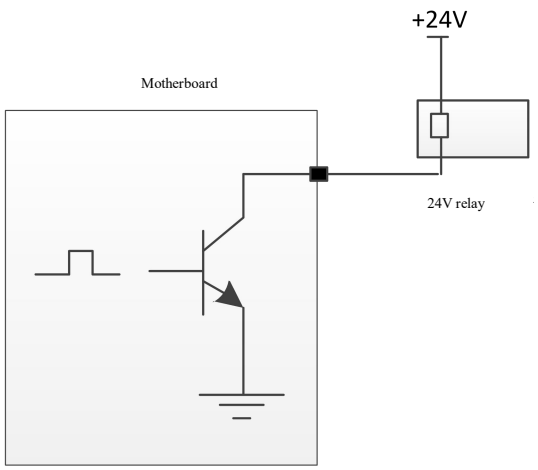

Schematic Diagram for Output Port Relay Wiring

Table 6.11.1

Pin	Signal	Definition	Description
1	OVCC	+24V power output	Power supply, maximum output is 500mA
2	Auxi.air	Protective gas	Used for protective gas blowing control
3	Output1	Green light	—
4	Output2	Red light	—
5	Output3	Buzzer	—
6	OVCC	+24V power output	Power supply, maximum output is 500mA

6.12 CN9 common input interface 2

The CN9 interface is a 4PIN green terminal. Table 6.12.1 shows the definition of CN9 interface.

Table 6.12.1

Pin	Signal	Definition	Description
1	GND	Reference ground	—
2	Input4	Underpressure alarm input	
3	Input5	Reserved	—
4	OVCC	+24V power output	Power supply, maximum output is 500mA

6.13 Galvanometer interface

The system provides two DB9 galvanometer interfaces (DB9 male connector and DB9 female connector), and the user can carry out mutual insertion directly.

Chapter VII Introduction to HMI Operation

7.1 Introduction to HMI function

As for the handheld laser welding system operation panel (hereinafter referred to as "HMI"), the 7cun configuration TFT touch screen is used, with beautiful interface and convenient operation. The laser-related parameters can be set, respectively and the real-time display of input/output IO state, alarm information and running state can be realized on the main interface.

Refer to the following figure for the HMI main interface.

Main interface of HMI

[Bluetooth mark]: Display whether the Bluetooth matching connection between the equipment and the mobile terminal is conducted.

[Swing Disabling]: The galvanometer motor swing is enabled or disabled by the button.

[Enabling of Safety Lock]: The safety lock can be enabled or disabled by the button. When the safety lock is enabled, the emission of laser will stop if the plumb joint fails to touch the welding material at the moment of welding.

[Disabling of Automatic Wire Feed]: Whether automatic wire feed is performed at the moment of welding can be controlled by the button. Automatic wire feed will arise only when the laser emission is allowed

[Forbidding Laser Emission]: Emission of laser can be allowed or forbidden by the button.

[Alarm State Area]: After the alarm signal is enabled, the real-time display of protective gas underpressure alarm, cold water flow alarm, laser alarm and temperature alarm state is conducted. The real-time display of safety lock state will arise when the safety lock is enabled; When the alarm signal isn't triggered, the corresponding alarm state will turn into blue; When the alarm occurs, the corresponding alarm icon will flicker between red light and blue light.

[Home Page][Wire Feed Parameters][Diagnosis][System Parameters]: Show the parameter category of current page parameters and click the corresponding icon for switch between corresponding parameter pages. For example: When the home page icon is on, it means that the parameter of current display area is the home page parameter; In case of needing to switch to the wire feed parameter, click the wire feed parameter position to switch to the wire feed parameter page and the corresponding wire feed parameter position will be on.

[Manual Blowing][Wire Feeder] Manual blowing test as well as wire feeder wire feed and wire withdrawal test. For example: Blowing is performed all the time by always pressing the manual blowing area, and the blowing will be disabled by loosening the manual blowing area. The corresponding small triangular arrow is pressed all the time for manual wire feed and wire drawing.

7.2 Introduction to HMI operation

7.2.1 Parameter setting:

The parameter setting covers: Home page, system parameter, wire feed parameter and diagnosis page setting.

[Home Page]: Used to set relevant parameters (such as laser, swing and process database) at the time of welding.

Process database: Click the white box area of the process database and choose the set process database parameter.

Welding mode: Setting the welding mode: Continuous, pulse mode.

Laser power: Set the peak power of the laser at the moment of welding.

Laser frequency: Set the laser PWM modulating signal frequency.

Duty ratio: Set the duty ratio of PWM modulating signal, with setting range: 1%~100%.

Swinging frequency: It is to set the swing frequency of motor.

Swing length: It is to set the swing width of motor.

Wire feeding speed: Set the wire feed speed at the time of welding.

Time of laser emission: Time of laser emission under the mode of spot welding.

Spot welding mode: Enter the spot welding laser emission mode.

Swing type: Set the motor swing graphics. Support '—', '○', '⧖', '∞', '◎'、, '△'.

7.2.2 [System parameter]: Used to set the basic parameters of the equipment, configured by the manufacturer generally. The passport needs to be input before entering the page.

System entry password: 666888 (six-digit figures).

Pulse enabling time: Time of laser emission under the pulse mode.

Pulse disenabling time: Pulse disabling time under the pulse mode.

Slow rise time: Used to set the time of slow increase from the initial power to the maximum power when the laser analog voltage is enabled.

Slow descent time: Used to set the time of slow decrease from the maximum power to the initial power when the laser analog voltage is disenabled.

Laser enabling power: Used to set the initial power of laser, it is the percentage of the welding power.

Time of advancing gradually when laser enabling: Control the time taken for the laser emission of the laser to slowly rise to the set power.

laser disenabling power: Used to set the laser disenabling power, it is the percentage of the welding power.

Time of advancing gradually when laser disenabling: Control the time taken by the laser disabling power of laser to slowly lower.

Language: Used for language switch.

Delay when the gas is enabled in advance: Delay in enabling gas can be set when processing is enabled. The emission of laser will start after blowing is delayed for a period of time by pressing the external start button.

Delay when the gas disabling is delayed: Delay in disenabling gas can be set when processing is disenabled. Stop blowing after stopping laser emission, and then delaying for a period of time when processing is stopped.

Automatic swing: Used for automatic swing when the galvanometer is set; Enable the automatic swing. When the breakover of the safety lock arises, the automatic swing of the galvanometer will happen. In case of no breakover of the safety lock, the galvanometer motor won't swing automatically after delay for a period of time.

Equipment parameters: Used to switch to equipment parameter page, with password input.

Authorized by: Used for mainboard authorization management.

Device number: Used to set the Bluetooth number of control system. When the user has several pieces of equipment, the number can be freely defined for management.

Center bias: Used to set the red light center bias.

7.2.3 [Wire feeding parameter]: Used to set the wire feed parameters, such as wire supplement parameter and wire withdrawal parameter.

Wire withdrawing speed: Motor wire withdrawal speed after the starting switch is loosened.

Time of wire withdrawal: Time of motor wire withdrawal.

Wire supplement speed: Speed of motor wire supplement.

Time of wire supplement: Time of motor wire supplement.

Wire feed delay time: Wire feed after delay for a period of time after laser emission which is generally 0.

Continuous wire feed: Used for wire change of wire feeder. Continuous wire feed will arise by clicking once, and continuous wire feed will stop by clicking anew.

Continuous wire withdrawal: Used for wire change of wire feeder. Continuous wire withdrawal will arise by clicking once, and continuous wire feed will stop by clicking anew.

[Diagnosis]: Used to monitor the current system IO state.

7.2.4 [Equipment parameter]: Used to set relevant parameters of the equipment.

Rated power of laser: Used for setting the rated power of the laser.

Maximum deflection of the galvanometer: Used for setting the maximum deflection scope of the galvanometer.

Maximum laser frequency: Set the maximum frequency of laser PWM signal. When the set PWM frequency of welding parameter exceeds the maximum frequency, the PWM frequency will be restricted to the maximum frequency.

Maximum swing length: Set the maximum length at the moment of swinging. When the set length of welding parameter exceeds the maximum length, the length will be restricted to the maximum length.

Wire feed step: Step at the time of motor wire feed.

Wire feed motor direction: Setting the direction polarity of the motor wire feed.

Galvanometer compensation coefficient X: If the length set by X axis is inconsistent with actual length, with a small difference, the correction can be performed by the parameter.

Galvanometer compensation coefficient Y: If the length set by Y axis is inconsistent with actual length, with a small difference, the correction can be performed by the parameter.

Lens temperature alarm enabling: It enables the lens temperature alarm. When the temperature exceeds the limit value, an alarm signal will be generated.

Lens temperature alarm limit: Lens temperature limit value.

Laser alarm enabling: Enable the laser alarm. When the laser gives an alarm, an alarm signal will be produced.

Laser alarm level: Laser alarm logic level.

Cooling-water machine alarm enabling: Enable the cooling-water machine alarm. When the cooling-water machine gives an alarm, an cooling-water machine signal will be produced.

Cooling-water machine alarm level: Cooling-water machine alarm logic level.

Underpressure alarm enabling: Enable the gas alarm. When an alarm is given due to the gas underpressure, an alarm signal will arise.

Underpressure alarm level: Under pressure alarm logic level.

Chapter VIII Monitoring and Protection Device

8.1 Temperature parameter setting of protective glass

[Home Page]→[System Parameter]→[Equipment Parameter]→[Input Password: 666888] →next page→ lens temperature alarm limit value.

It is suggested to set the set value of lens temperature to 50. After the lens temperature exceeds the set value, the alarm caution will arise on the home page and the display light on the side of the handheld plumb joint will turn to red.

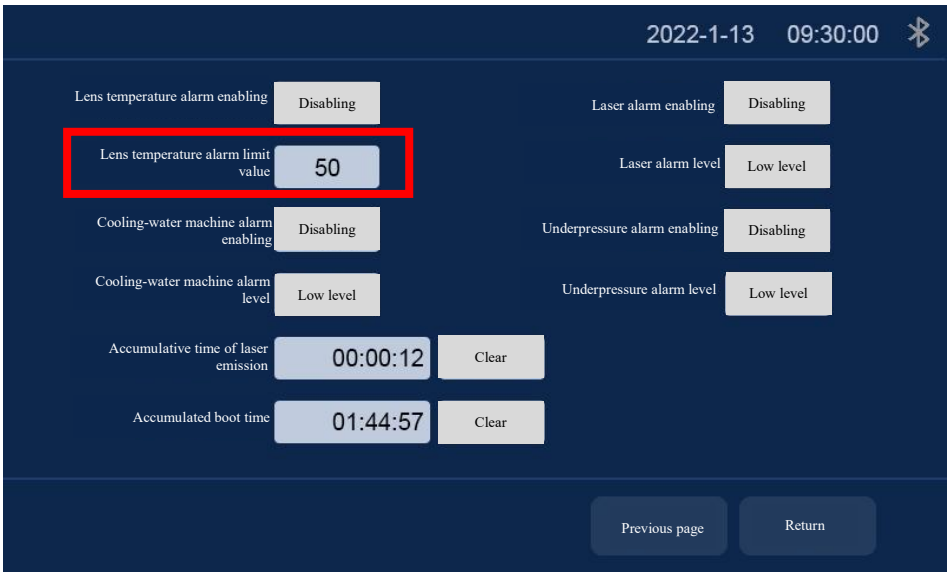

8.2 Bluetooth APP monitoring

In case of use for the first time, it is necessary to download the Farguard applet which can be used to contact the after-sales customer service personnel. Note: The APP now only supports the mobile phone with Android operating system. The applet icon is as follows:

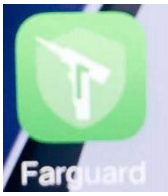

Monitoring home screen, welding system, cleaning system and selection as per the use category.

The current usage can be viewed by the equipment state page.

Main screen	Equipment Status
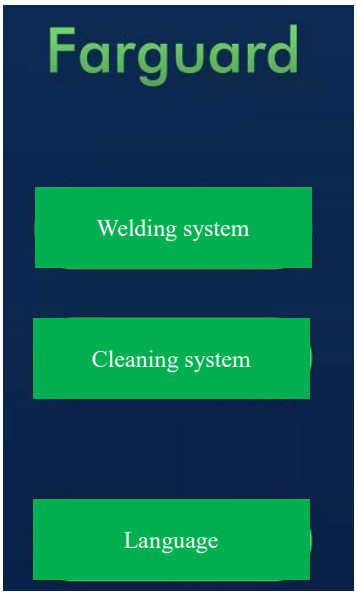	

Chapter IX Replacement of Cleaning Module

9.1 Replacement of structure

The schematic diagram is shown below

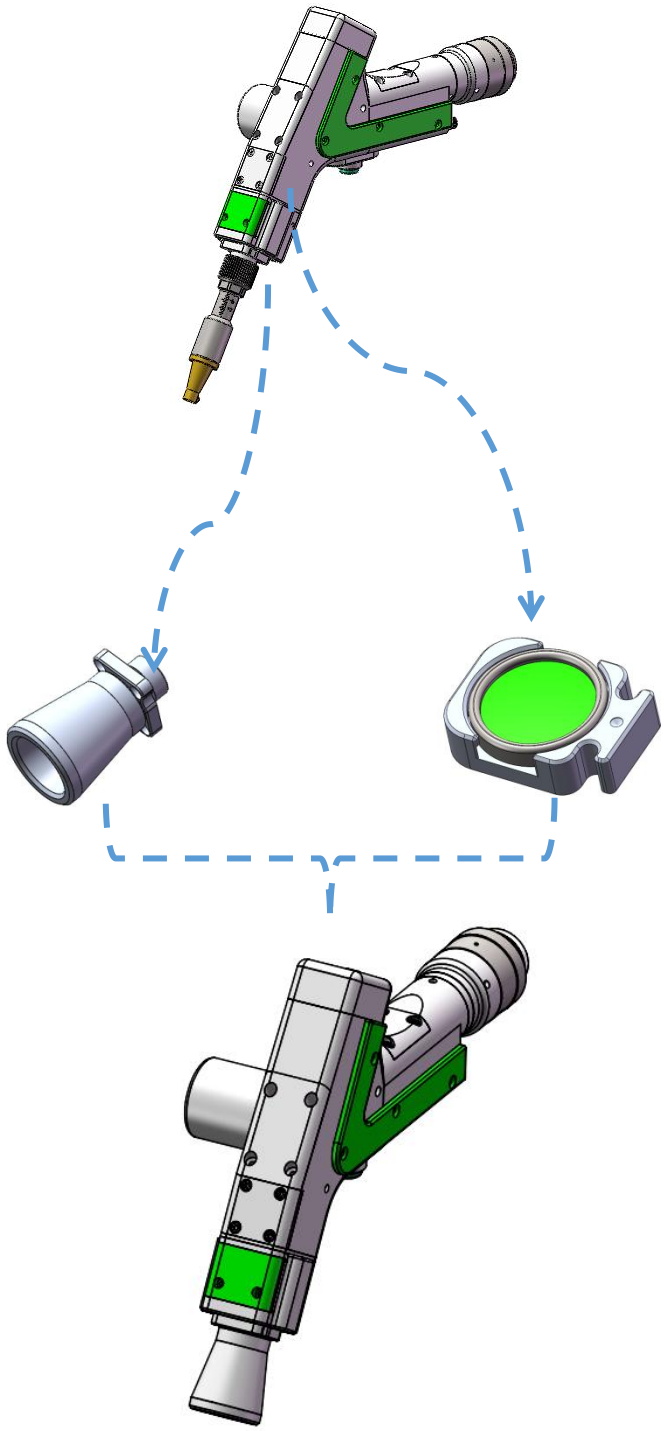

9.2 Module dismantling and replacement

[Wire Feed Holder Module]: Loosen the 2-M3 screw to take out the module (Figure 1)

[Brass Nozzle Connecting Base]: Loosen the 4-M2.5 screw to take out the module (Figure 2)

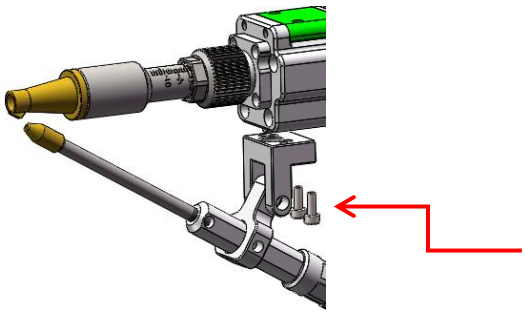

Figure 1

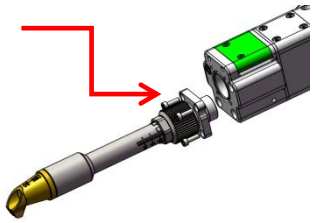

Figure 2

9.3 Installation and replacement

[Jacket Installation]: Installation pursuant to the sequence-1, 2 and 3.

[Installation of Focus Drawer]: Loosen the 4-M2.5 screw to directly draw out the focus module. Notice the small dot in the middle is in the upper part when the focus module is replaced and cleaned. The welding focus module replaced shall be subject to dustproof protection for use and replacement.

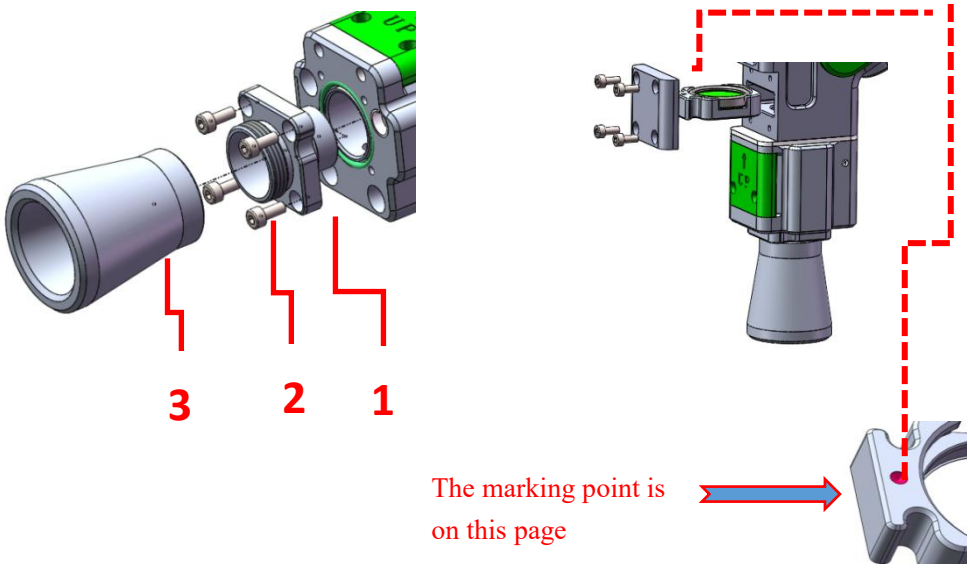

Chapter X Processing Module Switching

10.1 Selection of processing type

As for the welding mode switching to 35mm cleaning mode, inputting password-666666 will be reminded by clicking [Processing Type] on the panel pursuant to [System Parameter]->[Authorization]->[Processing Type]. After the password is put correctly, enter the system type selection interface, as shown in the figure:

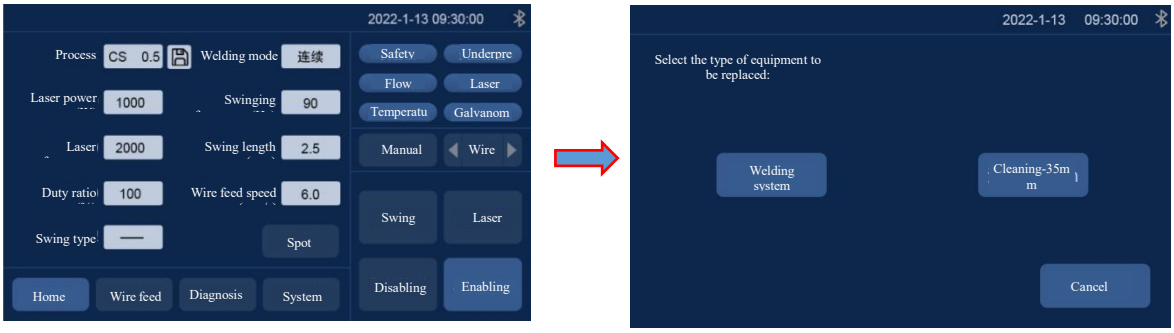

10.2 Hint of module replacement

After the user chooses the processing type, the system shall

use the text and picture for prompting for the gun head component to be replaced. The system will remind power-on anew by clicking [Confirm] after the user confirms the corresponding hardware components and replacement conditions. The equipment is powered down by the use interface to replace the corresponding component.

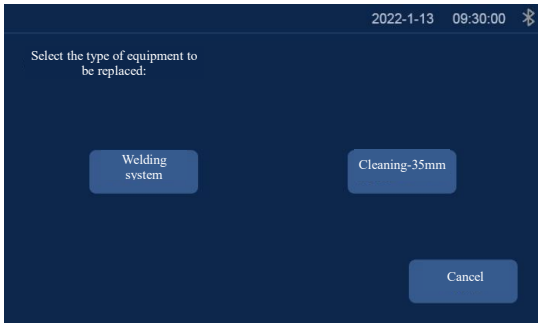

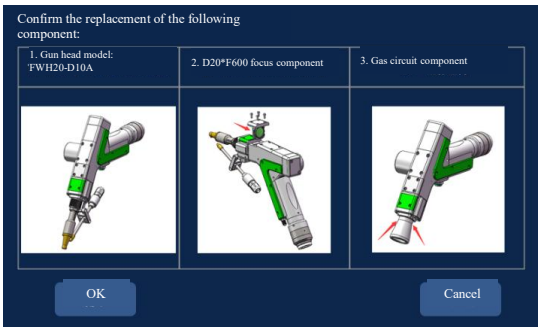

10.3 Switch completion

After the replacement of hardware component by the user is over, the equipment can be powered on anew. Whether you confirm the replacement of the hardware component will be reminded again at the moment. The user shall click [Confirm] after confirming the replacement of component is over and the system processing mode switch will be over.

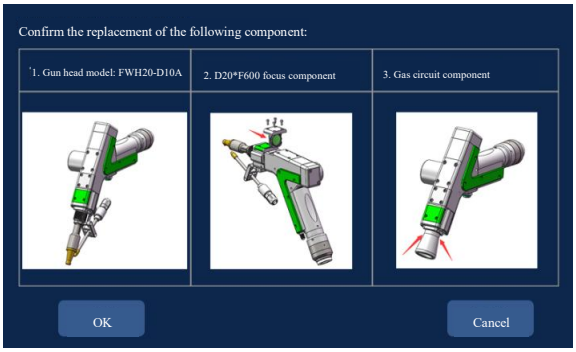

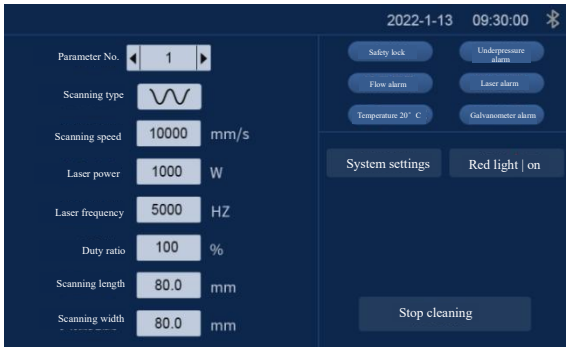

Chapter XI Welding Seam Cleaning and Replacement

11.1 The schematic diagram for replacement of structure is as follows:

Remove the welding nozzle and replace the special nozzle for welding seam cleaning.

11.2 System switching

The system is easy to switch, and the maximum width of welding seam cleaning is 12 mm.

Thank you for using the intelligent technology product of Shenzhen RelFar!

Website: www.relfar.com

Tel.: 0755-23143635

Address: Block E, Area I, Siyuan Industrial Park, Heping Community, Fuhai Street, Bao'an District, Shenzhen City, Guangdong Province