# Shenzhen RelFar Intelligent Technology Co., Ltd.

---

# FWH20-C20A Intelligent Handheld Cleaning Head

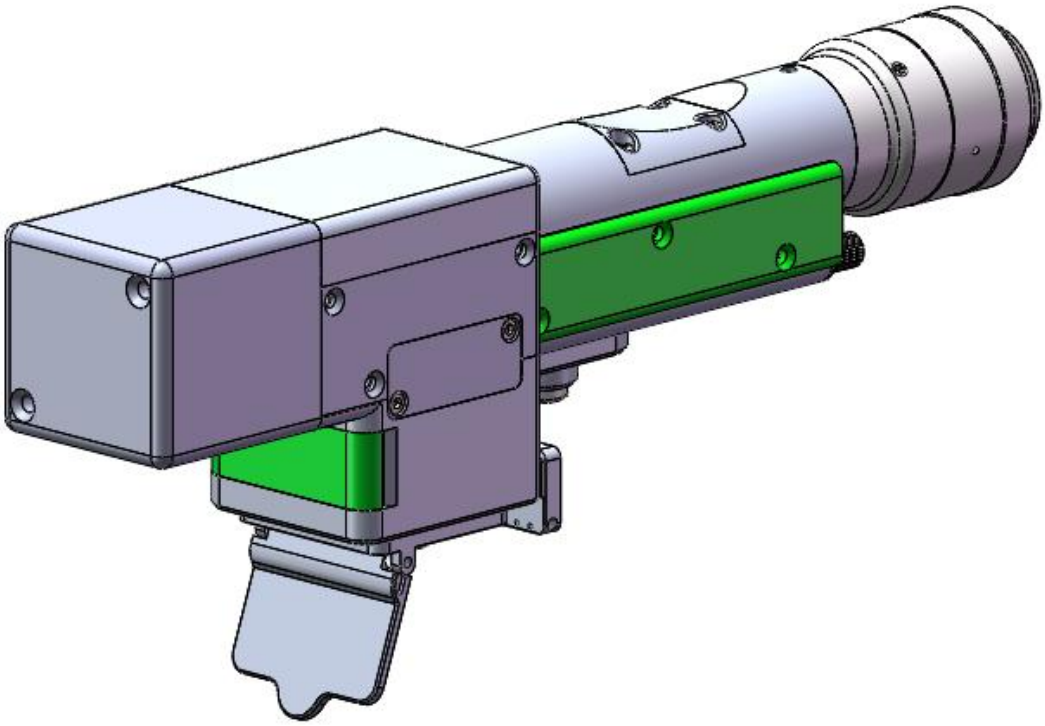

**Shenzhen RelFar Intelligent Technology Co., Ltd.**

**Shenzhen RelFar Intelligent Technology Co.,Ltd.**

**Website: www.relfar.com**

**Tel.: 0755-23143635**

**Address: Factory, Area B, Haiweijingsong, Lusiyuan 1 District, Qiaohe Road, Heping Community, Fuhai Sub-district, Bao'an District, Shenzhen City, Guangdong Province**

**Date of issue: Aug. 19 2023 Version: B**

# Foreword

Thank you for choosing our products!

To enable you to have an overall understanding of our company, there is a detailed introduction regarding features, structural features, technical parameters, instructions for use and maintenance of the product in the Manual. Carefully read the Manual to help you better us it before the product is used.

Due to constant update of product functions, the product you received may differ from the description in the manual. We hereby express our deep sorry for this matter! In case of any question in the use process, timely call us for consultation, and we will offer dedicated service to you wholeheartedly.

# Contents

Chapter I Overview ..... 5
**1.1 Product parameters** ..... 5
**1.2 Precautions** ..... 5
Chapter II Structural Characteristics ..... 6
**2.1 Product structure** ..... 6
Chapter III Product Installation ..... 8
**3.1 Pipe connection** ..... 8
3.1.1 Cooling water ..... 9
3.1.2 Maintained gas ..... 9
**3.2 Optical fiber input installation** ..... 10
Chapter IV Maintenance ..... 13
**4.1 Structure of optics lens** ..... 13
**4.2 Cleaning of optics lens** ..... 14
**4.3 Disassembly and assembly of optics lens** ..... 16
4.3.1 Disassembly and assembly of collimation lens ..... 16
4.3.2 Disassembly and assembly of focus lens ..... 17
4.3.3 Disassembly and assembly of protective glass ..... 18
Chapter V Laser Cleaning System ..... 20
**5.1 Installation Dimension Drawing for Product** ..... 20
5.1.1 Installation dimension of touch screen ..... 20
5.1.2 Installation dimension of mainboard ..... 21
Chapter VI Electrical ..... 22
**6.1 Table for Electrical Materials** ..... 22
**6.2 System wiring** ..... 23
**6.3 CN5 power supply interface** ..... 24
**6.4 CN1 wire feeder interface** ..... 24
**6.5 CN2 laser interface** ..... 25
**6.6 CN3 temperature sensor interface** ..... 26
**6.7 HMI touch screen interface** ..... 26
**6.8 CN4 reserved serial interface** ..... 26
**6.9 CN6 external start and safety lock interface** ..... 27
**6.10 CN7 common input interface 1** ..... 28
**6.11 CN8 common output interface** ..... 28
**6.12 CN9 common input interface 2** ..... 29
**6.13 Galvanometer interface** ..... 30
Chapter VII Introduction To HMI Operation ..... 31
**7.1 Introduction to HMI function** ..... 31
**System parameter setting** ..... 32
**7.3 Equipment parameters** ..... 33

**7.4 Alarm message** ..... 34
Chapter X Processing Module Switching ..... 35
**8.1 Selection of processing type** ..... 35
**8.2 Hint of module replacement** ..... 35
**8.3 Switch completion** ..... 36
**8.4 System parameters** ..... 36
Chapter VIII Monitoring and Protection Device ..... 38
**9.1 Temperature parameter setting of protective glass** ..... 38
**9.2 Bluetooth APP monitoring** ..... 38

# Chapter I Overview

## 1.1 Product parameters

| | |
|---|---|
| Name | Intelligent Handheld Cleaning Head |
| Model | FWH20-C20A |
| Fiber interface | QBH |
| Wavelength scope | 1070±20nm |
| Rated power | ≤3000W |
| Collimation focal length | F50mm |
| Focus focal length | F600mm |
| Scanning width | 0～300mm |
| Scanning speed | 20000mm/s |
| Auxiliary pressure | ≥0.5～0.8Mpa |
| Effective clear aperture | Ø22 |
| Weight | 0.78Kg |

## 1.2 Precautions

※ Before the laser prsents, the front end flip cover plate is required to be opened.

※ To ensure personal safety, please wear the special fiber laser protective glasses before operation.

※ It's necessary to keep the product clean and prevent the cooling liquid, condensate water or other foreign matter from intruding into the cavity, or the functional contamination and functional impact of related parts will be incurred.

# Chapter II Structural Characteristics

## 2.1 Product structure

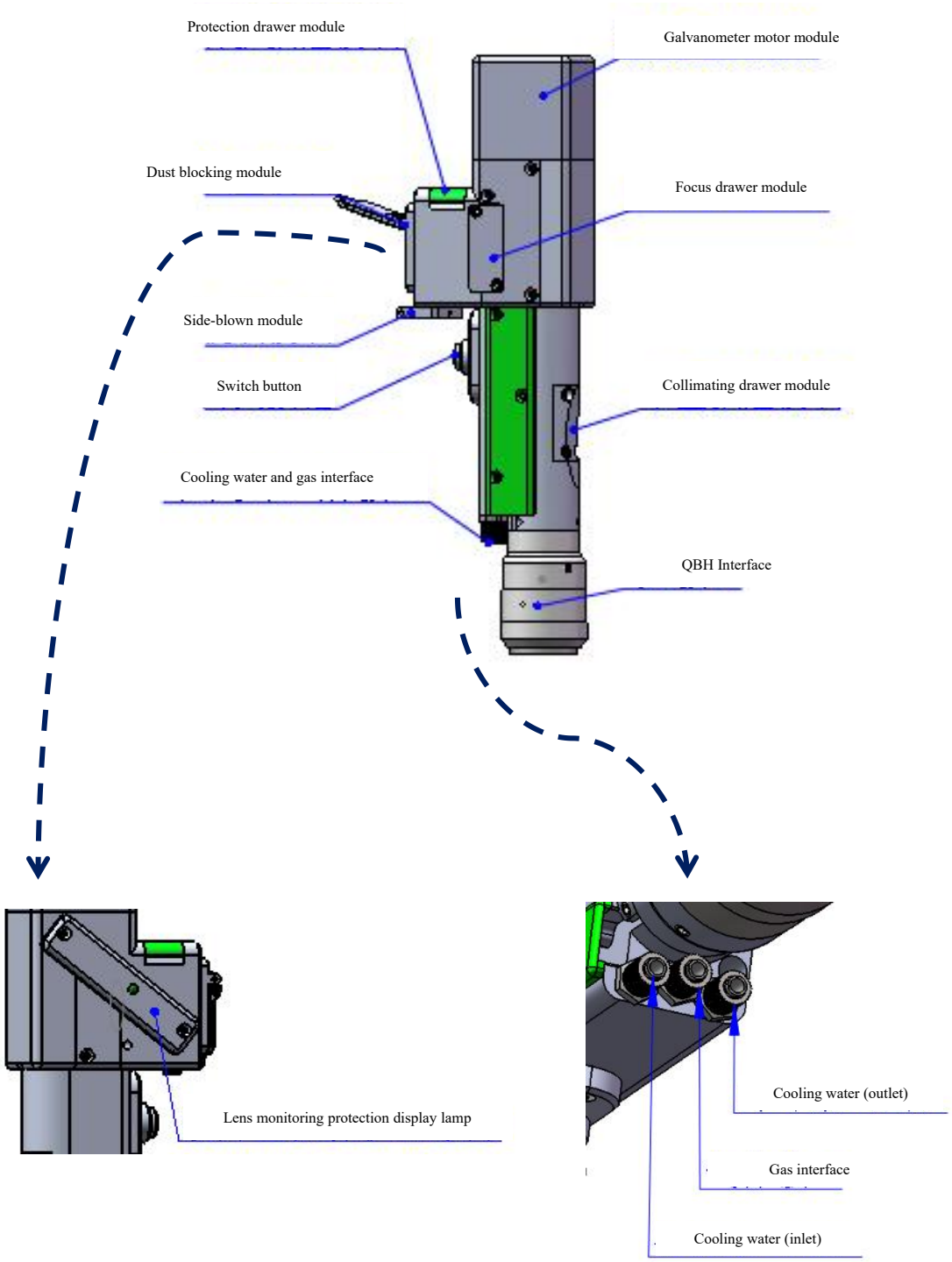
Protection drawer module
Galvanometer motor module
Dust blocking module
Focus drawer module
Side-blown module
Switch button
Collimating drawer module
Cooling water and gas interface
QBH Interface
Lens monitoring protection display lamp
Cooling water (outlet)
Gas interface
Cooling water (inlet)

# Chapter III Product Installation

## 3.1 Pipe connection

Cooling water circuit and auxiliary protective gas connection

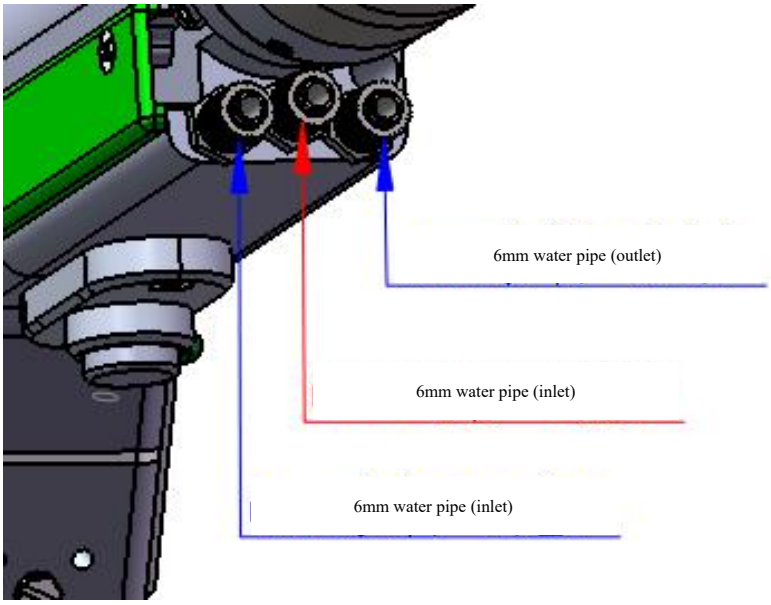


Connection of cooling water and protective gas and usage requirements:

Notes: Gas for regular use: Compressed air (oil-water filtration required)

Gas for regular use: Argon, nitrogen and compressed air (oil-water filtration required).

3.1.1 Cooling water: The 6mm air tube is connected. The main function is that the excess heat is taken away by cooling through the internal structural member water route when the heat is produced by the light path in the cavity to ensure the cleaning performance. The series connection of cooling water pipeline is required, with one-in and one-out water circulation connected.

3.1.2 Maintained gas: The 6mm air tube is connected for butt welding gas protection, with input pressure＜0.5～0.8MPa.

### 3.2 Optical fiber input installation

※ The QBH is a horizontal arrangement to take out the dustproof seal cover.

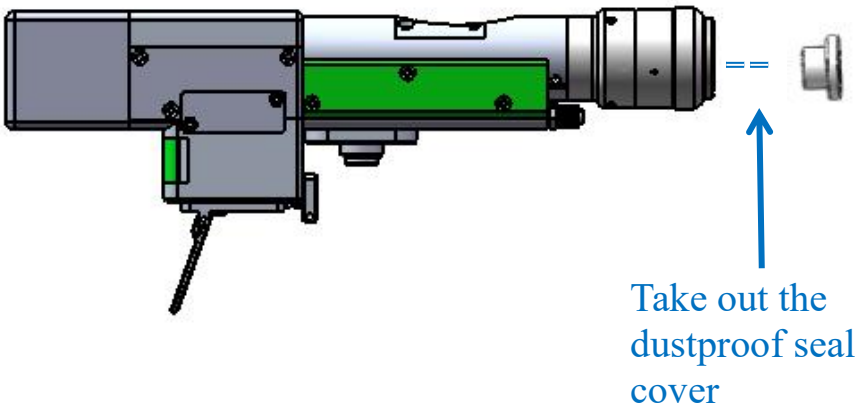


※ Align the red dot on the fiber optic head with the QBH red dot, and slowly insert the fiber optic head into the QBH.

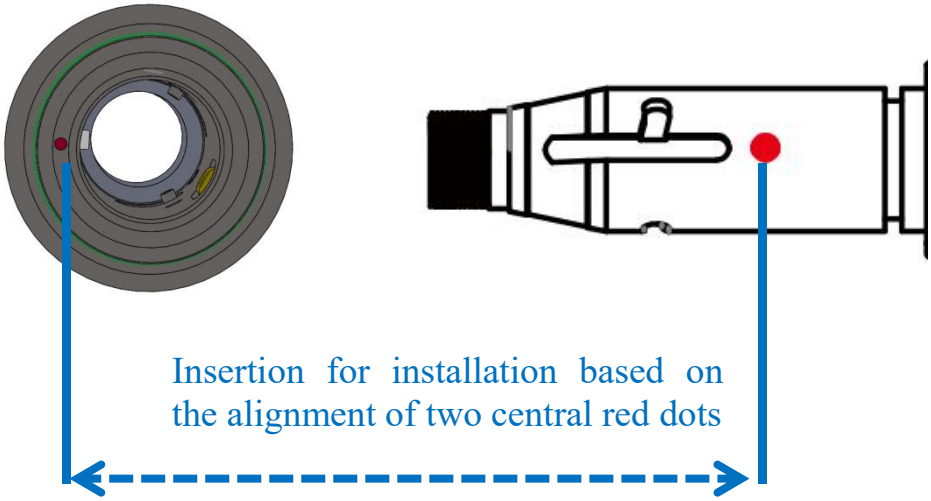


※ The QHB is screwed to the locking state: Rotate it to the limiting position clockwise (hearing the "click"), lift up the rotating mantle, and clockwise rotate the mantle until the head of optical fiber is compressed.

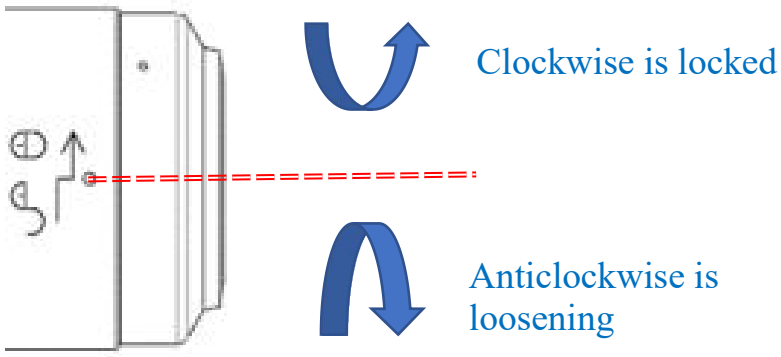


※ Before the laser presents, open the front end clamshell dust blocking plate! !

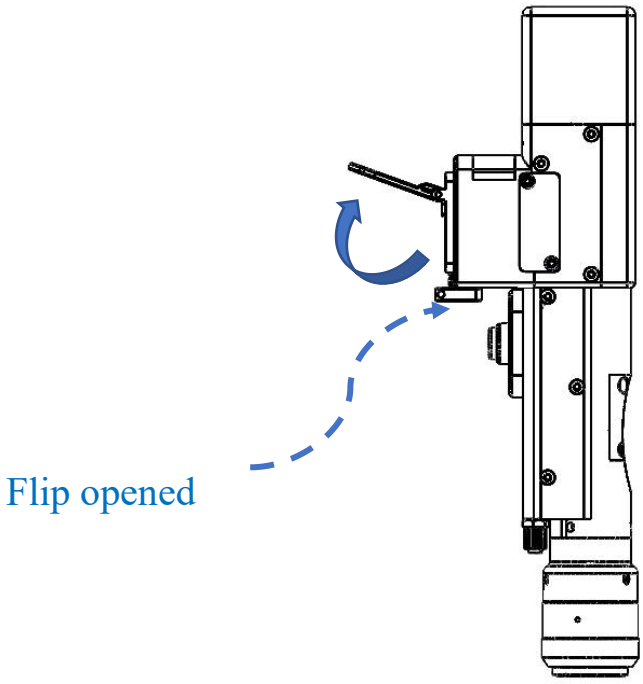

# Chapter IV Maintenance

## 4.1 Structure of optics lens

※ The assembly is completed in the dust-free plant at the time of replacement of parts. In principle, except for the front-end first protective glass can be disassembled and assembled, other modules are forbidden to be dismounted. If it is necessary to check the collimation lens, focus lens and galvanometer lens, the product shall be put into a clean environment for disassembly.

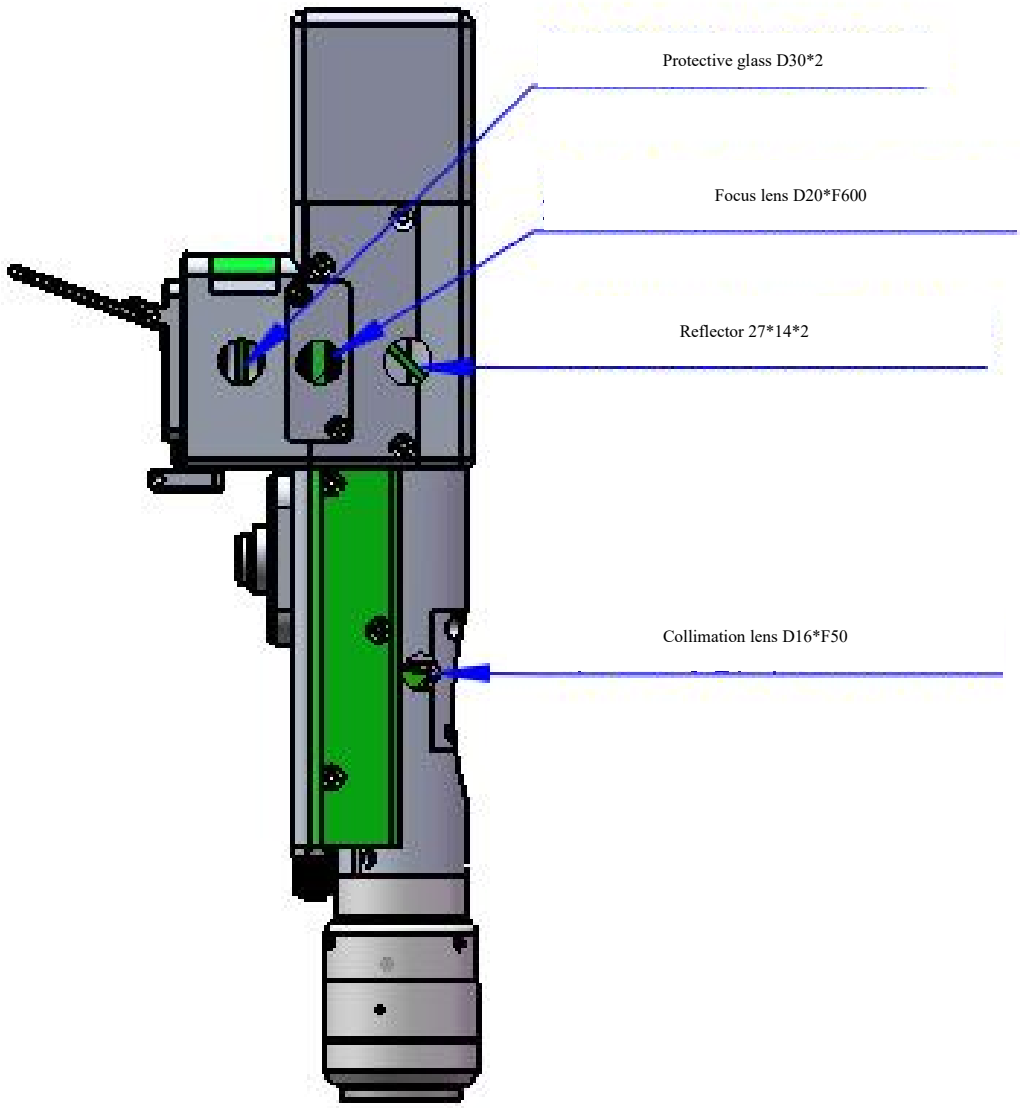


## 4.2 Cleaning of optics lens

※ When the optics lens are cleaned, the operation method and attention points are as follows:

※ Tools: dust-free gloves or dust-free fingerstall, dust-free wiping cotton swab, isopropyl alcohol, and caned dry and pure compressed air.

※ Spray the isopropyl alcohol onto the dust-free cotton swab, align the lens to eyes, gently pinch the side edge of the lens with left thumb and index finger and hold the dust-free cotton swab with right hand to gently wipe the front and back of the lens in a single direction from bottom to top or from left to right (avoid wiping back and forth to avert the secondary contamination of lens), blow the surface of the lens with filling dry and pure compressed air and confirm the surface of lens is free from foreign matters after cleaning.

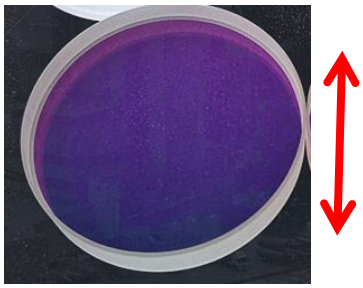

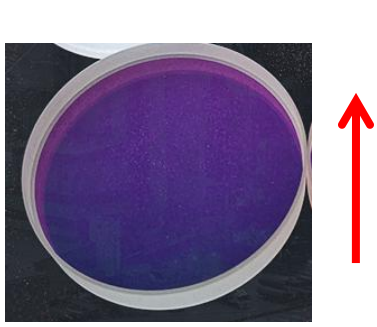

### 4.3 Disassembly and assembly of optics lens

4.3.1 Disassembly and assembly of collimation lens

Tool: 2mm inner-hexagon wrench, dust-free cotton swab, alcohol.

※ The disassembly and assembly shall be completed in a clean place. When the lens are dismounted, the dust-free gloves or dust-free fingerstall.

※ Disassembly and assembly steps:

Step 1: Clean up all the dust on the surface of the laser head firstly.

Step 2: Loosen the 4-M2.5*6 screw in the figure with 2mm inner-hexagon wrench.

Step 3: Take out the collimating drawer module and seal the port with textured paper to prevent the dust from entering the cavity.

Step 4: When the two bosses are aligned with the opening slot after the gland is rotated anticlockwise, remove them upward and replace the lens. (Note that the orientation of lens installation can be divided into plane and convex surface. After disassembly, record it; otherwise, the optical path will be affected.)

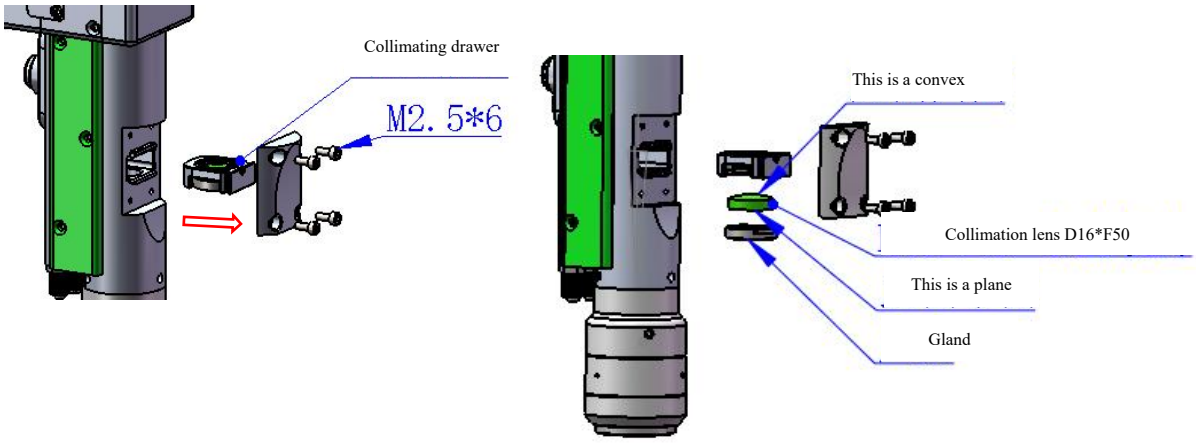


4.3.2 Disassembly and assembly of focus lens

Tool: 2mm inner-hexagon wrench, dust-free cotton swab, alcohol

※ The disassembly and assembly shall be completed in a clean place. When the lens are dismounted, the dust-free gloves or dust-free fingerstall.

※ Disassembly and assembly steps:

Step 1: (figure 1) Loosen the lateral 2-M2.5 screws.

Step 2 : Remove the focus drawer assembly horizontally and seal the exposed sealing surface of the cavity with textured paper to prevent dust from entering.

Step 3: (figure 2) When the two bosses are aligned with the opening slot after the gland is rotated anticlockwise, remove

them upward and replace the lens. (Note that the orientation of lens installation can be divided into plane and convex surface. After disassembly, record it; otherwise, the optical path will be affected.)

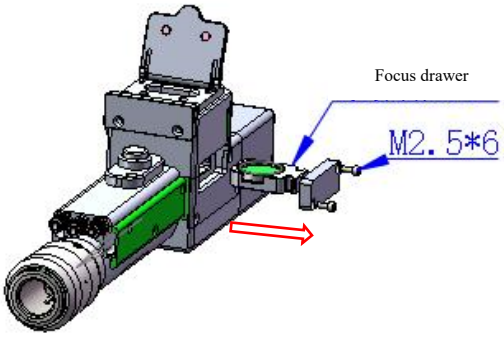


Figure

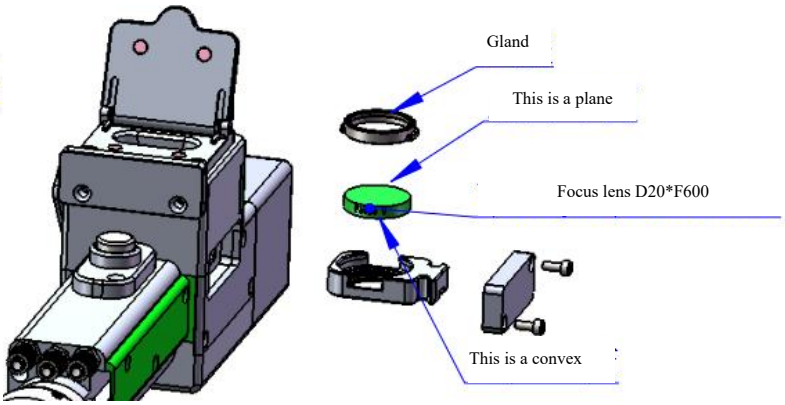


Schema

4.3.3 Disassembly and assembly of protective glass

※ The disassembly and assembly shall be completed in a clean place. When the lens are dismounted, the dust-free gloves or dust-free fingerstall.

**Change the protective lens**

The first step is to take both sides of the drawer in hand and pull out the protective drawer seat upward. After taking it out, seal the window exposed on the cavity with textured paper to prevent dust from entering.

Step 2,

When the two bosses are aligned with the opening slot after the gland is rotated anticlockwise, remove them upward and replace the lens.

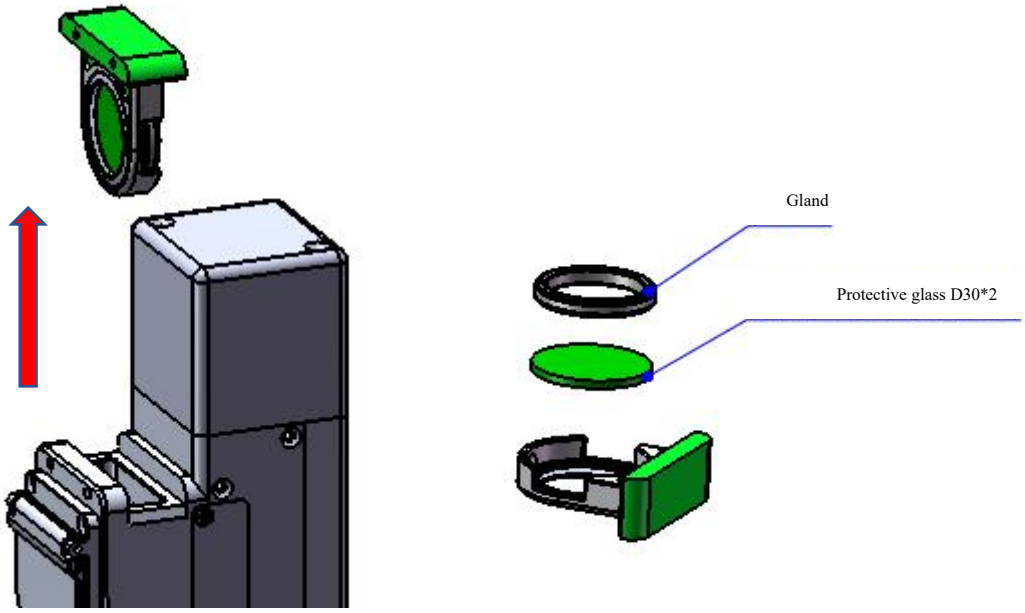

# Chapter V Laser Cleaning System

## 5.1 Installation Dimension Drawing for Product

### 5.1.1 Installation dimension of touch screen

External dimension (209.5*150*24)mm

The installation dimension of the touch screen is shown in the following figure:

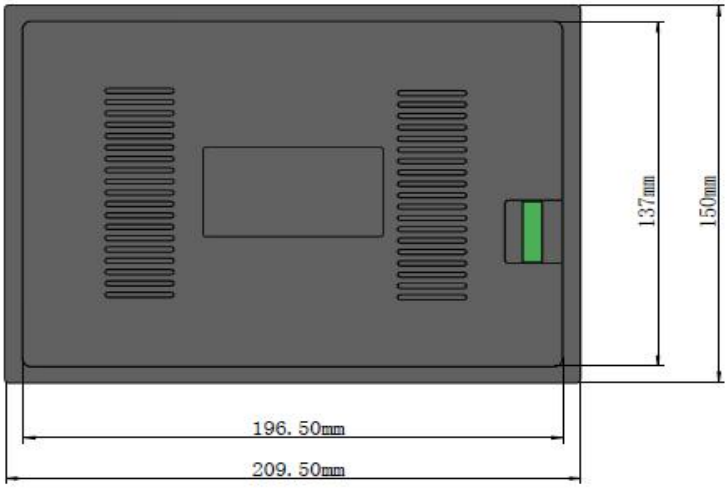


Rear View

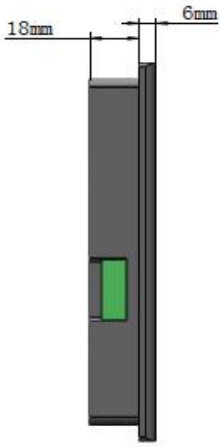


Left View

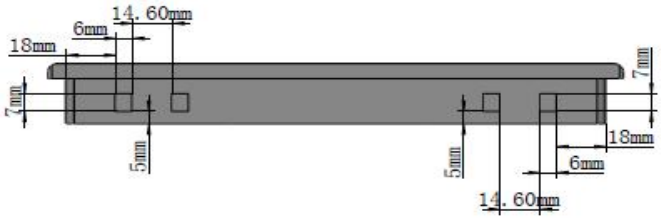


Top View

5.1.2 Installation dimension of mainboard

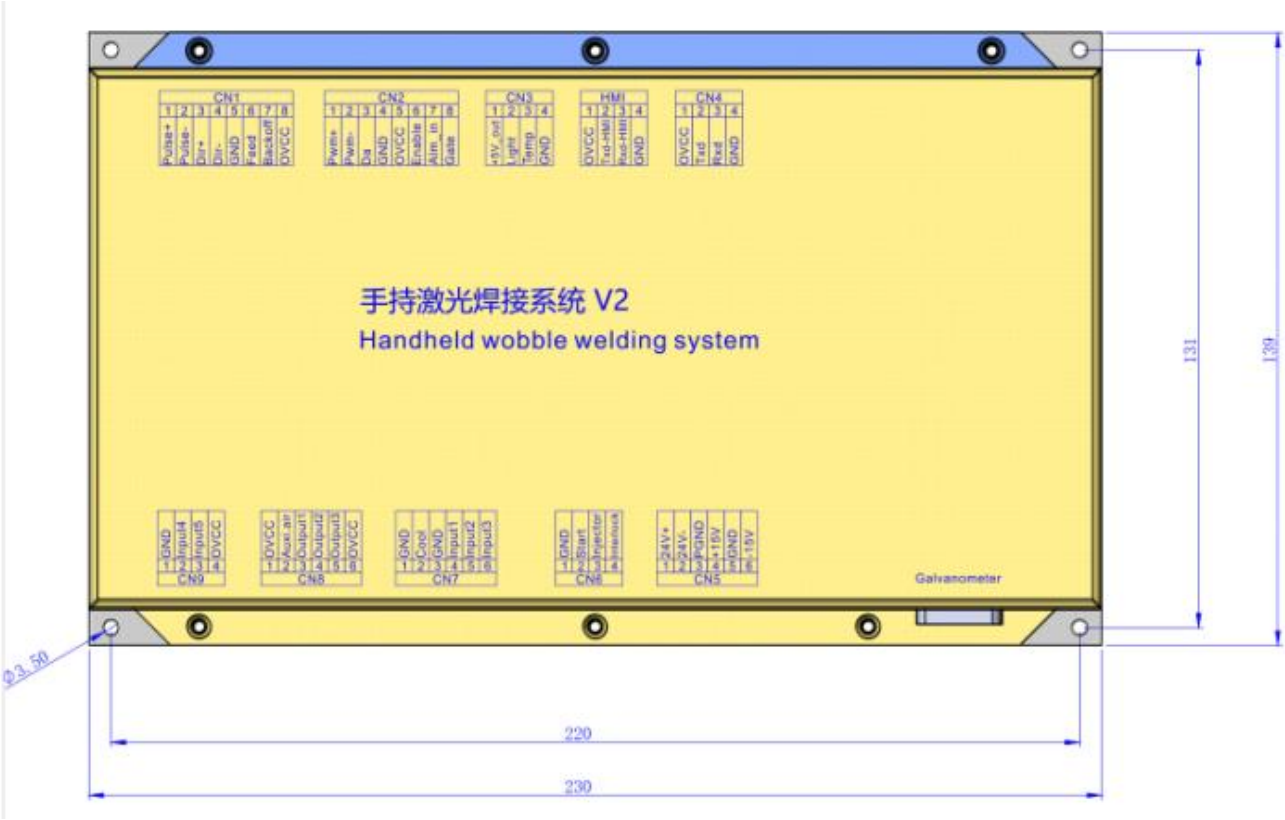


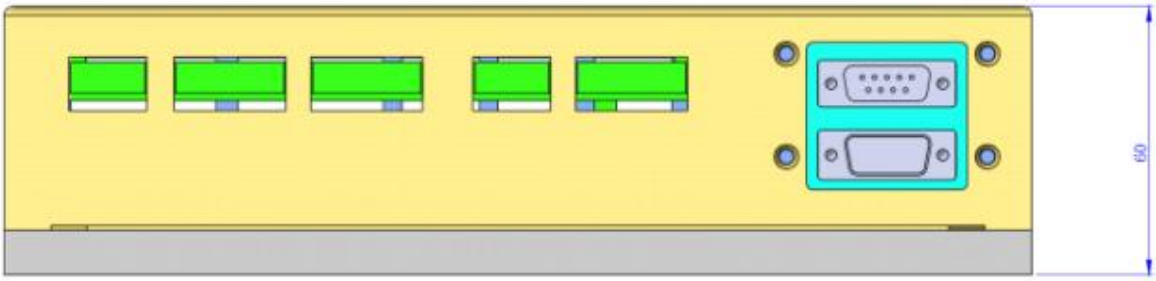

# Chapter VI Electrical

## 6.1 Table for Electrical Materials

| List | | | | |
|---|---|---|---|---|
| S/N | Name | Graphical representation | Quantity | Remarks |
| 1 | Intelligent Handheld Cleaning Head | | 1PCS | |
| 2 | 24V power pack | 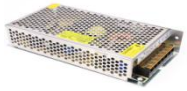 | 1PCS | |
| 3 | 15V power pack | | 1PCS | |
| 4 | Display screen 7 inches | | 1PCS | |
| 5 | Touch screen 4-core connecting line-1.5m-black | | 1PCS | |
| 6 | Handheld laser welding system V2 | | 1PCS | |
| 7 | Bluetooth antenna | | 1PCS | |

## 6.2 System wiring

The following figure is a schematic diagram for wiring of the whole system. Refer to the schematic diagram for system wiring. Refer to relevant chapters for detailed interface definition.

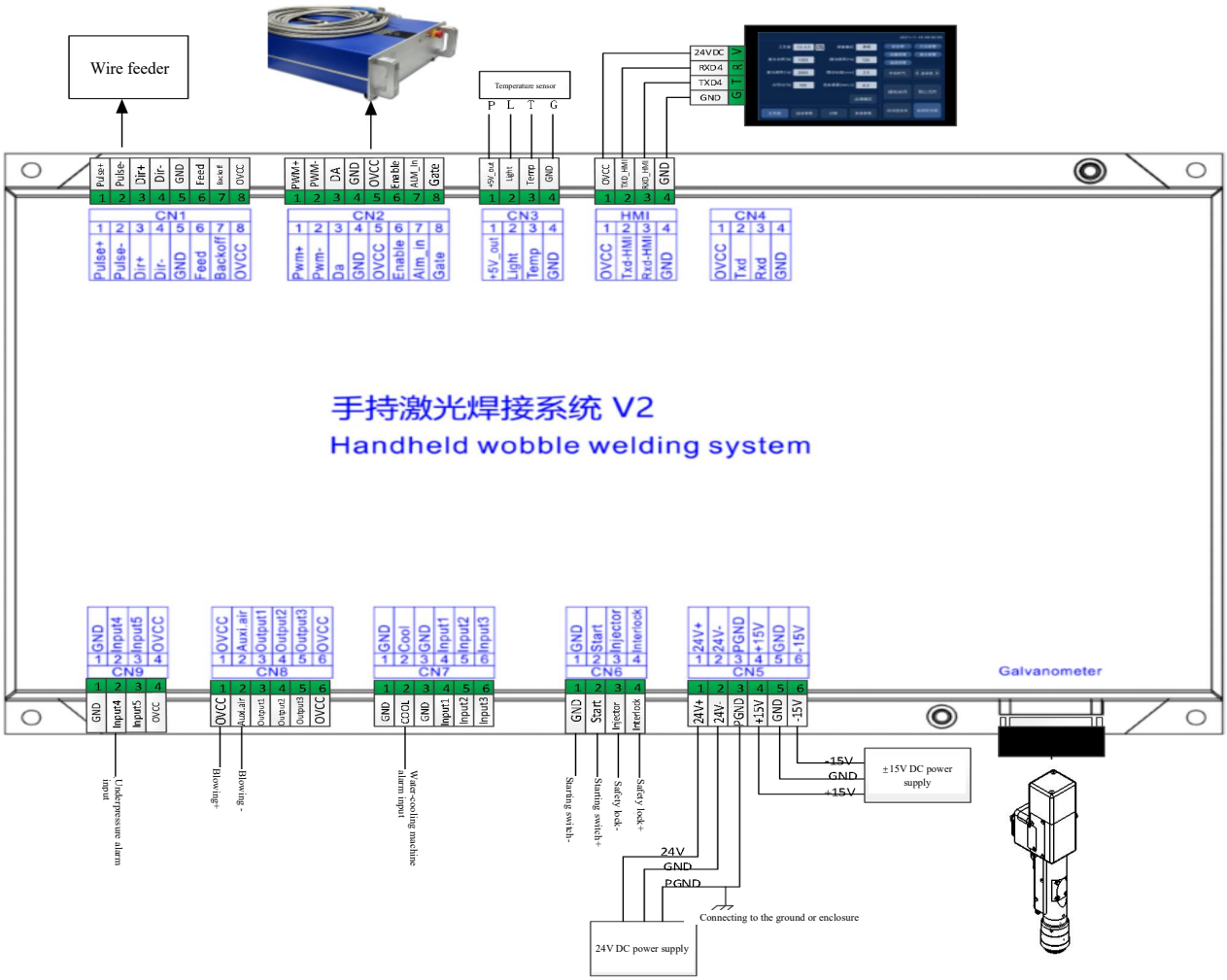


**Note:**
**Don't connect the reserved pin in the mainboard.**

## 6.3 CN5 power supply interface

The power supply interface falls into 6PIN green terminal, providing a power interface for mainboard and galvanometer externally, with voltage: DC 24V (DC 24V) and DC ±15V (DC ±15).

Table 6.3.1 shows the definition of power supply interface.

Table 6.3.1

| Pin | Signal | Definition | Description |
|---|---|---|---|
| 1 | 24V+ | Power input | +24V external power input and power supply output current: above 3A |
| 2 | 24V- | Power reference ground | — |
| 3 | PGND | External shielding ground | Generally connecting to ground or enclosure |
| 4 | +15V | Power input | +15V external power input and power supply output current: above 3A |
| 5 | GND | Power reference ground | — |
| 6 | -15V | Power input | -15V external power input and power supply output current: above 3A |

## 6.4 CN1 wire feeder interface

The wire feeder interface CN1 is a 8PIN green terminal, supporting motor wire feed and IO wire feed. Table 6.4.1 shows the definition of wire feeder interface.

Table 6.4.1

| Pin | Signal | Definition | Description |
|---|---|---|---|

| | | | |
|---|---|---|---|
| 1 | Pulse+ | Motor wire feed pulse + interface | Used for motor wire feed and connection with driver PUL+ |
| 2 | Pulse- | Motor wire feed pulse - interface | Used for motor wire feed and connection with driver PUL- |
| 3 | DIR+ | Motor wire feed direction + interface | Used for motor wire feed and connection with driver Dir+ |
| 4 | DIR- | Motor wire feed direction-interface | Used for motor wire feed and connection with driver Dir- |
| 5 | GND | Reference ground | — |
| 6 | Feed | Wire feed control interface | Used for automatic wire feed of IO control wire feeder |
| 7 | Backoff | Spinning control interface | Used for automatic wire feed of IO control wire feeder |
| 8 | OVCC | +24V power output | Power supply, maximum output: 500mA |

## 6.5 CN2 laser interface

The laser interface is a 8PIN green terminal. Table 6.5.1 shows the definition of laser interface.

Table 6.5.1

| Pin | Signal | Definition | Description |
|---|---|---|---|
| 1 | PWM+ | Modulating signal+ | Duty ratio: 1%-99% (adjustable), 24V level |
| 2 | PWM- | Modulating signal- | Duty ratio: 1%-99% (adjustable), 24V level |
| 3 | DA | Analog voltage output | 0-10V analog voltage, used for laser peak power adjustment |
| 4 | GND | Power reference ground | Generally connecting to DA- and Enable-end |
| 5 | OVCC | +24V power output | Power supply, maximum output: 500mA |

| | | | |
|---|---|---|---|
| 6 | Enable | Laser enabling signal | 24V level and high level: effective |
| 7 | Alarm | Laser failure alarm input | — |
| 8 | GATE | Red light index signal | The signal is needed by part of lasers. The function is reserved for use when leaving the factory |

## 6.6 CN3 temperature sensor interface

The temperature sensor interface CN3 is a 4PIN green terminal. Table 6.6.1 shows the definition of temperature sensor. The user directly inserts the supporting connection line with terminal.

Table 6.6.1

| Pin | Signal | Definition | Description |
|---|---|---|---|
| 1 | +5V_out | Sensor P port | +5V Power supply, maximum output: 5mA |
| 2 | Light | Sensor L port | — |
| 3 | Temp | Sensor T port | — |
| 4 | GND | Sensor G port | — |

## 6.7 HMI touch screen interface

The HMI interface is a 4PIN green terminal and power supply to and communication with HMI by the mainboard are performed via the port. Table 6.7.1 shows the definition of HMI interface.

Table 6.7.1

| Pin | Signal | Definition | Description |
|---|---|---|---|
| 1 | OVCC | +24V power output, 500mA | Panel power supply |
| 2 | TXD_HMI | Connecting to the HMI sending end | Serial port communication TXD signal |
| 3 | RXD_HMI | Connecting to the HMI receiving end | Serial port communication RXD signal |
| 4 | GND | Power reference ground | — |

## 6.8 CN4 reserved serial interface

The reserved serial port CN4 interface falls into 4PIN green terminal, with no connection reserved. Table 6.8.1 shows the definition of CN4 interface.

Table 6.8.1

| Pin | Signal | Definition | Description |
|---|---|---|---|
| 1 | OVCC | +24V power output, 500mA | Power supply |
| 2 | TXD | TXD signal | Serial port communication TXD signal |
| 3 | RXD | TXD signal | Serial port communication RXD signal |
| 4 | GND | Power reference ground | — |

## 6.9 CN6 external start and safety lock interface

The CN6 interface is a 4PIN green terminal. Table 6.9.1 shows the definition of CN6 interface.

Table 6.9.1

| Pin | Signal | Definition | Description |
|---|---|---|---|
| 1 | GND | Reference ground | Generally connecting to the start button switch on the plumb joint- |
| 2 | Start | External start switch input | Generally connecting to the start button switch on the plumb joint+ |
| 3 | Injector | Safety clamp signal input | The pin must be connected to the safety clamp and the safety clamp shall be clamped onto the metal material before welding. |
| 4 | Interlock | Safety lock signal input | The pin must be connected to the nozzle of the handheld head. The nozzle touches the metal material at the moment of welding. |

## 6.10 CN7 common input interface 1

The CN7 interface is a 6PIN green terminal and of NPN type. Table 6.10.1 shows the definition of CN7 interface.

Table 6.10.1

| Pin | Signal | Definition | Description |
|---|---|---|---|
| 1 | GND | Reference ground | — |
| 2 | Cool | Water-cooling machine alarm input | |
| 3 | GND | Reference ground | — |
| 4 | Input1 | Reservation | — |
| 5 | Input2 | Reservation | — |
| 6 | Input3 | Reservation | — |

## 6.11 CN8 common output interface

The CN8 interface is a 6PIN green terminal. The OC output can be used to directly drive the relay and the maximum current can reach to 500mA. Table 6.11.1-Schematic Diagram for Wiring is as follows:

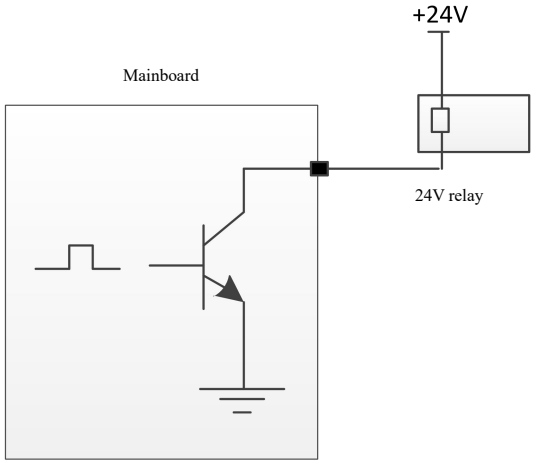


**Schematic Diagram for Output Port Relay Wiring**

Table 6.11.1

| Pin | Signal | Definition | Description |
|---|---|---|---|
| 1 | OVCC | +24V power output | Power supply, maximum output: 500mA |
| 2 | Auxi.air | Protective gas | Used for protective gas blowing control |
| 3 | Output1 | Green light | — |
| 4 | Output2 | Red light | — |
| 5 | Output3 | Buzzer | — |
| 6 | OVCC | +24V power output | Power supply, maximum output: 500mA |

## 6.12 CN9 common input interface 2

The CN9 interface is a 4PIN green terminal. Table 6.12.1 shows the definition of CN9 interface.

Table 6.12.1

| Pin | Signal | Definition | Description |
|---|---|---|---|
| 1 | GND | Reference ground | — |
| 2 | Input4 | Underpressure alarm | |

| | | | |
|---|---|---|---|
| | | input | |
| 3 | Input5 | Reservation | — |
| 4 | OVCC | +24V power output | Power supply, maximum output: 500mA |

## 6.13 Galvanometer interface

The system provides two DB9 galvanometer interfaces, one DB9 male and one DB9 female.

# Chapter VII Introduction To HMI Operation

## 7.1 Introduction to HMI function

As for the handheld laser welding system operation panel (hereinafter referred to as "HMI"), the 7cun configuration TFT touch screen is used, with beautiful interface and convenient operation. The laser-related parameters can be set, respectively and the real-time display of input/output IO state, alarm information and running state can be realized on the main interface.

Refer to the following figure for the HMI main interface.

**Main interface of HMI**

[Bluetooth mark]: Display whether the bluetooth matching connection between the equipment and the mobile terminal is conducted.

[Scanning parameter]: Used to set the parameters related to the scanning processing of the galvanometer.

Parameter No: Multiple groups of different cleaning parameters can be set with different parameter numbers.

Scanning speed: It is used to set the scanning speed of the galvanometer.

Laser power: It is used to set the percentage of the peak power of the laser.

Laser frequency: It is used to set the PWM frequency of the laser.

Duty ratio: It is used to set PWM signal duty ratio of continuous laser.

Scanning length: It is used to set the length of the laser scan.

[System Settings]: Click to enter the system setting page and modify system function parameters.

[Alarm State Area]: After the alarm signal is enabled, the real-time display of protective gas undervoltage alarm, cold water flow alarm, laser alarm and temperature alarm, and galvanometer state is conducted. The real-time display of safety lock state will arise when the safety lock is enabled; When the alarm signal isn't triggered, the corresponding alarm state will turn into blue; When the alarm occurs, the corresponding alarm icon will flicker between red light and blue light.

[Red light | switch on/off]: The red light switch can control the switch of the laser red light indication.

[preparation \ stop | cleaning]: Emission of laser can be allowed or forbidden by the button. In a state ready to clean, press the cleaning start button will be laser cleaning; Under the stop cleaning state, press the cleaning start button will not produce light cleaning.

## 7.2 System parameter setting

System parameter setting, The modification takes effect after being saved.

**Double click light extraction enabling:** Switch off the enabling function. Click the button once and the laser will come out. Switch on the enabling function. Double click the button twice and the laser will come out.

**Air release delay:** Delay in enabling gas can be set when processing is enabled. The emission of laser will start after blowing is delayed for a period of time by pressing the external start button.

**Air close delay:** Delay in closing gas can be set when processing is stopped. Stop blowing after stopping laser emission, and then delaying for a period of time when processing is stopped.

**Scale factor:** This parameter is used to set the maximum range of the galvanometer. The value must be consistent with the actual range of the galvanometer; otherwise, the actual length and width of the light output may be inaccurate.

**Enabling the safety lock:** Select whether to enable security lock protection.

[Chinese/2 English]: Switch between Chinese and English languages.

**Automatic screen lock:** When the automatic screen lock is enabled, the system automatically switches to the screen lock page when no operations are performed on the touchscreen after a period of time.

[Authorization]: Perform authorization code reading and decryption operations, and display the information about the panel and mainboard version numbers.

## 7.3 Equipment parameters

[Equipment parameters]: It is used to limits the maximum and minimum parameters. This parameter limits the laser parameters, only by entering the password to enable it. After the parameter is changed, it must be saved to take effect.

**Maximum scanning speed:** It is used to set the maximum oscillating speed of the galvanometer

**Minimum scanning speed:** It is used to set the minimum oscillating speed of the galvanometer

**Maximum scanning speed:** It is used to set the maximum scanning length allowed by the equipment

**Minimum scanning speed:** It is used to set the minimum scanning length allowed by the equipment

**Laser rated power:** It is used for setting the rated power of the laser.

**Maximum laser frequency:** It is used to set the maximum laser frequency

**Minimum laser frequency:** It is used to set the minimum laser frequency

**Laser alarm enabling:** It is used to set whether to enable laser alarm. If this parameter is enabled, a laser alarm will be generated when the laser alarm input triggers the alarm.

**Laser alarm electrical level:** It is used to set the laser alarm that triggers the electrical level logic.

**Water-cooling machine alarm enabling:** It is used to set whether to enable water-cooling

machine alarm. If this parameter is enabled, a water-cooling machine alarm will be generated when the water-cooling machine alarm input triggers the alarm.

**Water-cooling machine alarm electrical level:** It is used to set the water-cooling machine alarm that triggers the electrical level logic.

**Undervoltage alarm enabling:** It is used to set whether to enable gas undervoltage alarm. If this parameter is enabled, a undervoltage alarm will be generated when the undervoltage alarm input triggers the alarm.

**Undervoltage alarm level:** It is used to set the undervoltage alarm that triggers the electrical level logic.

**Temperature alarm enabling:** It enables the lens temperature alarm. When the temperature exceeds the limit value, an alarm signal will be generated.

**Temperature alarm limit:** Lens temperature limit value.

## 7.4 Alarm message

Alarm information includes: Safety clamp alarm and machine alarm.

Safety clamp alarm lies in that the safety clamp and cleaning head is not reliable conduction.

Machine alarm includes 3 alarms, laser alarm, water-cooling machine alarm, undervoltage alarm. In the alarm information interface, it can display multiple alarm information, up to 3 pages, and it can switch through the previous page and the next page.

When the alarm is triggered, the output of the laser will be stopped and the galvanometer will stop moving at the same time, and the corresponding alarm information will be prompted. The user can check the related hardware problems according to the alarm prompt and remove the alarm. When the alarm is lifted, the alarm record of the machine alarm will still exist in the alarm information. At this time, you can manually clear the alarm by entering the alarm information interface. If the alarm is not lifted, the alarm will continue to prompt when it is manually cleared.

# Chapter VIII Processing Module Switching

## 8.1 Selection of processing type

As for the welding mode switching to 150mm cleaning mode, inputting password-666666 will be reminded by clicking [Processing Type] on the panel pursuant to [System Parameter]->[Authorization]->[Processing Type]. After the password is put correctly, enter the system type selection interface, as shown in the figure:

## 8.2 Hint of module replacement

After the user chooses the processing type, the system shall use the text and picture for prompting for the gun head component to be replaced. The system will remind power-on anew by clicking [Confirm] after the user confirms the corresponding hardware components and replacement conditions. The equipment is powered down by the use interface to replace the corresponding component.

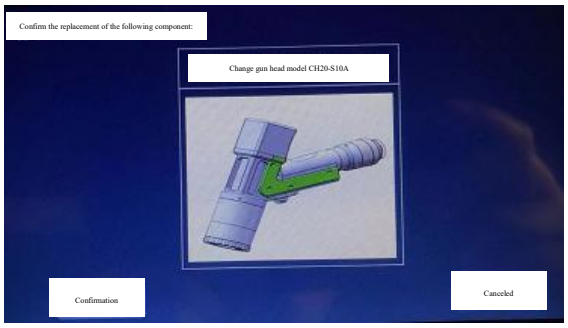


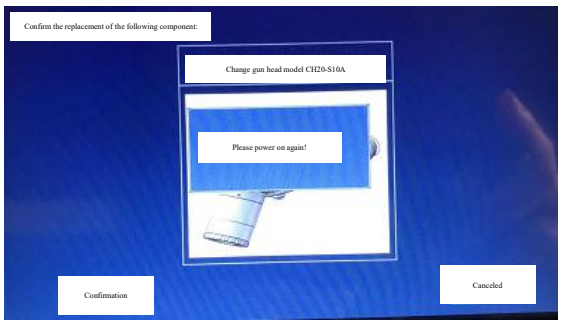


## 8.3 Switch completion

After the replacement of hardware component by the user is over, the equipment can be powered on anew. Whether you confirm the replacement of the hardware component will be reminded again at the moment. The user shall click [Confirm] after confirming the replacement of component is over and the system processing mode switch will be over.

**Warm tips: After replacing a component, the system prompts you to confirm for the second time.**

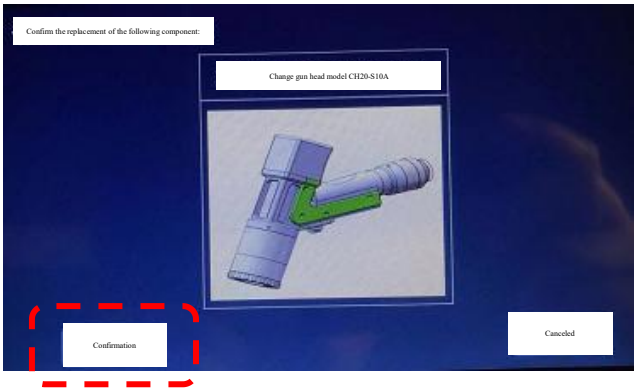


## 8.4 System parameters

The user needs to set parameters before using. Click [System Parameters] to set.

Double click light extraction enabling: The enabling is opened, double click the button for twice to extract light, close the enabling button, click once to extract light.

Scale factor: The system parameter is changed to 295.

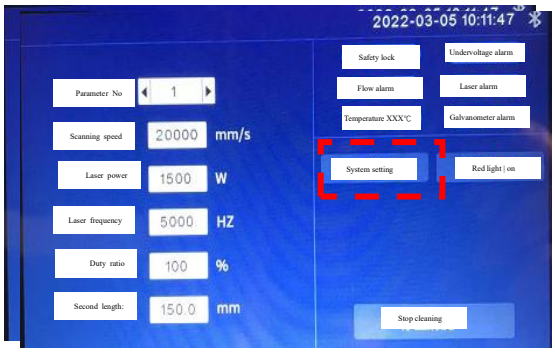


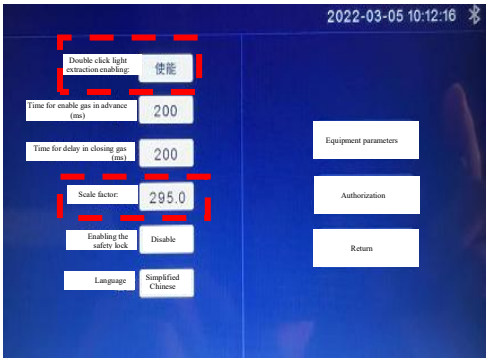

# Chapter IX Monitoring and Protection Device

## 9.1 Temperature parameter setting of protective glass

[Home Page]→[System Parameter]→[Equipment Parameter]→[Input Password: 666888] →next page→ lens temperature alarm limit value.

It's suggested to set the set value of lens temperature to 50. After the lens temperature exceeds the set value, the alarm caution will arise on the home page and the display light on the side of the handheld plumb joint will turn to red.

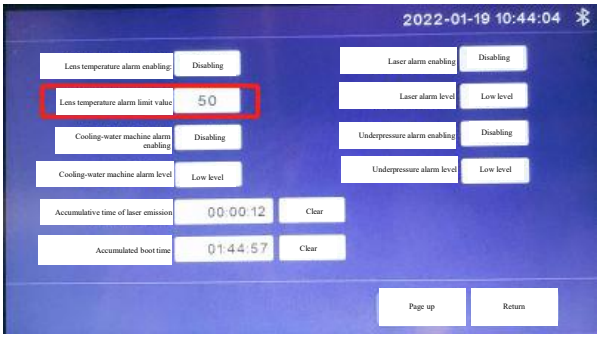


## 9.2 Bluetooth APP monitoring

In case of use for the first time, it's necessary to download the Farguard applet which can be used to contact the after-sales customer service personnel. Notes: The APP now only supports the mobile phone with Android operating system. The applet icon is as follows:

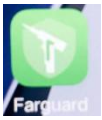


Monitoring home screen, welding system, cleaning system and selection as per the use category.

The current usage can be viewed by the equipment state page.

| Home screen | Equipment status |
| --- | --- |
| 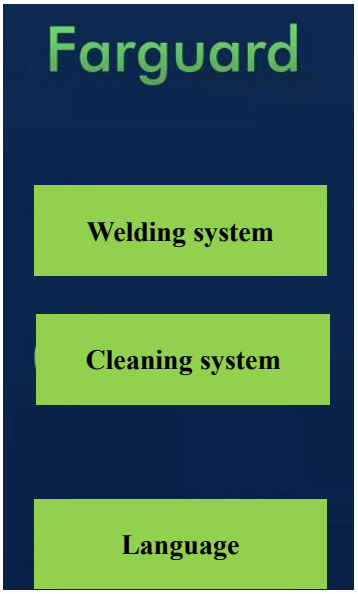 | 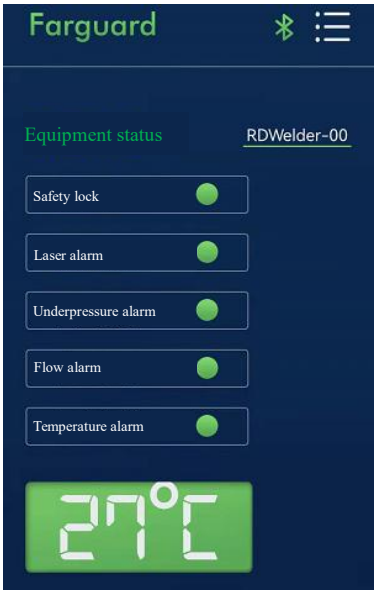 |

# Shenzhen RelFar Intelligent Technology Co., Ltd.

**Thank you for using the intelligent technology product of Shenzhen RelFar!**

**Website: www.relfar.com**

**Tel.: 0755-23143635**

**Address: Factory, Area B, Haiweijingsong, Lusiyuan 1 District, Qiaohe Road, Heping Community, Fuhai Sub-district, Bao'an District, Shenzhen City, Guangdong Province**