WATTSAN M1 6090/1313/1325/1616/2030/2040
CNC ROUTER MACHINE MANUAL

Wattsan

Jinan Wattsan CNC Technology Co. Ltd

Copyright Notice

Jinan Wattsan CNC Technology Co. Ltd (hereinafter referred to as Wattsan CNC Technology) reserves the right to make changes to the products and specifications described in this manual without prior notice to the user.
Wattsan CNC Technology shall not be liable for any direct, indirect, special, incidental, or consequential damages or liabilities arising from misuse of this manual or its products trademarks or copyright objects belonging to their owners.

No part of this manual may be copied, reproduced, extracted or translated without prior permission.

Any names mentioned in this manual are used for identification purposes only and may be registered trademarks or copyrights of their respective owners.

Address:

No 1588, Hongxin Road, Tianqiao District, Jinan City, Shandong Province, China

TEL: +86-13153105797

E-mail: info@wattsan.com

Contents

Specifications 6

Equipment 7

1. Introduction 10

1.1 Equipment Description 10

1.2 Key Features and Benefits 10

1.3 Purpose of the equipment 10

1.4 Applications 10

1.5 Basic Operating Requirements 11

Chapter 2. Safety engineering 11

2.1. Overview 11

2.2 General safety requirements 11

2.3 Precautions for Machine Operation 12

2.4. Electrical safety 12

2.5. Obligations of the Operator 12

Chapter 3. Appearance of the machines 13

3.1 Machine Dimensions 13

3.2 Control cabinet with control unit 19

Chapter 4. Acceptance and unpacking 21

4.1 General Information 21

4.2 Unloading equipment by forklift or stacker 21

4.3 Unboxing 22

Chapter 5. Installation 23

5.1 Preparing the Installation Site 23

5.2 Installing the Gantry 23

5.3 Installing Stepper Motors 26

5.4 Connecting the Machine to the Control Unit 28

5.4.1 Wiring Connection 28

5.4.2 Power Supply Connection 29

5.4.3 Connecting the RichAuto Controller 30

5.5 Installing Vibration Mounts 31

5.6 Connecting the Chiller 32

5.6.1 Connection procedure 32

5.6.2 Chiller Setup 36

5.7 Material Installation 36

5.7.1 Fastening with pressure plates 36

5.7.2 Vacuum table (if equipped) 38
5.7.3 Connecting the Vacuum Pump 39
5.8 Centralized Lubrication System 41
5.9 Connecting the Compressor (Optional) 42
5.10 Connecting the Coolant System (Optional) 43
5.11 Tool Installation 45
5.12 Tool Installation (ATC Spindle) 47
Chapter 6. Control system 49
6.1. RichAuto Controller 49
6.2 Running the Program via Flash Drive 53
6.3 NC Studio 56
6.4 Installing the NC Studio Driver 57
Chapter 7. Get started 60
7.1 Starting the Machine 60
7.1.1 Machine Start-Up Procedure: 60
7.1.2. Procedure "Leaving for the house" 62
7.2 Gantry Alignment 63
7.2.1 Checking gantry diagonals 63
7.2.2 Alignment of gantry diagonals 66
Chapter 8. Machine maintenance 69
Chapter 9. Troubleshooting 70
Chapter 10. Warranty 71

Dear customer!

Thank you for purchasing our equipment. We hope that his work will delight you for a long time.

The machines are manufactured in accordance with global standards. Each equipment undergoes pre-sale preparation.

First of all, we strongly recommend that this manual be read carefully and completely before using the equipment. Failure to comply with certain points of the Operating Manual may result in injury to personnel and/or damage to equipment!

Follow the instructions in this instruction. This will not only make the work easier, but also make the use of the equipment safe and long-term. Please follow these instructions carefully.

This document is intended to introduce the basic technical data and usage requirements of the Wattsan CNC router.

This document contains the main parameters and characteristics of the equipment.

In the event that the equipment is transferred to another customer, this document shall be transferred with it.

The manufacturer reserves the right to make changes and improvements to the design that do not impair the declared characteristics of the equipment.

SPECIFICATIONS

Model		6090	1313	1325	1616	2030	2040
Working field, mm	X	600	1300	1300	1600	2100	2100
	Y	900	1300	2500	1600	3100	4100
	Z	300	300	300	300	300	300
Length, mm		1492	1890	3092	2192	3692	4692
Width, mm		1382	2082	2082	2382	2882	2882
Height, mm		1890	1890	1890	1890	1890	1890
Weight, kg		400	520	690	590	860	1050
Motors XYZ		2 phase					
Guides		Hiwin 20mm					
Rack		25*25mm					
X/Y Axis Gearbox		Planetary gear 1:5					
Number of spindles		1					
Maximum feed speed, mm/min X		25000					
Maximum feed rate, mm/min Y		25000					
Maximum feed speed, mm/min Z		3000					
Spindle power, W		3200					
Positioning accuracy, mm.		0,05					
Working temperature/ambient temperature, °C		15-30					
Spindle cooling type		Water / Air					
Power supply, V		220/380 +- 10%					
Max power consumption, W		~5500					
Chiller power consumption, W		<2000					
Auto-lubrication system		HP-5R Pump / Automatic pump					
Vacuum Table		Optional					

EQUIPMENT

Name	Quantity
Machine	1 pc
RichAuto A11	1 pc
USB Cable	1 pc
Fuse Kit	1 pc
Wrench Set	1 pc
Milling bits set	1 pc
Collet set	1 pc
Clamp Set	1 pc
Key Set	1 pc
Water pump*	1 pc

* - Comes with a water-cooled spindle

Information about signs and symbols

In this instruction manual, the following designations, signs and symbols are used to convey particularly important information:

	This indicates a hazardous situation that could result in serious injury or death if the specified instructions are not strictly followed.
	Indicates a potential hazard that could result in minor injury or damage to the product.
	It contains important information about the safe and correct handling of the product.
	This component is energized by an electric current. In these places, strictly follow the safety rules when working with electricity.

Read the instructions carefully before starting.

Note!

The equipment you directly purchased may differ from the equipment shown in the figures.

	Untrained personnel should not be allowed to work with this equipment and install it.
MUST-DO	The location of the equipment must be equipped with fire extinguishing equipment. It is forbidden to store flammable and explosive substances near the device.
MUST-DO	The user must ensure that the material to be processed is suitable for processing on the machine in order to avoid risks to the life and operation of the equipment.
FORBIDDER	The operator must not leave the equipment unattended while it is in operation. The equipment must be turned off at the end of operation.
FORBIDDER	During the operation of the machine, it is forbidden to be in the area of movement of moving parts of the machine.
	The equipment must be located in a dry, uncontaminated place. The temperature inside the room should be 15-30 Co. Humidity should be in the range of 5-70% (provided there is no condensation).
	The equipment operates from an AC voltage of 220/380 V with a frequency of 50 / 60 Hz. It is forbidden to use the equipment without a voltage stabilizer.

Attention!

The seller is not responsible for the improper use of the equipment and if the user fails to take precautions.

1. INTRODUCTION

1.1 EQUIPMENT DESCRIPTION

The WATTSAN M1 CNC router is designed for high-precision machining of various materials such as wood, aluminum, plastic, composites, acrylic and soft metals. This machine is ideal for use in industries such as furniture manufacturing, advertising, decorative work, as well as for the manufacture of molds and other products that require precision machining. Thanks to its robust design and automatic tool change system, the WATTSAN M1 can operate at high speed without losing accuracy.

1.2 KEY FEATURES AND BENEFITS

- **Powerful Spindle**: Provides high power, which allows you to process hard materials such as aluminum and dense wood.
- **Pneumatic Tool Changer (Optional):** Speeds up the process with fast tool changes. This feature reduces downtime and increases productivity.
- **RichAuto Control System (Optional**): Intuitive USB-enabled controller that provides convenient control and stability for demanding tasks.
- **Vacuum table (optional):** A powerful vacuum system allows the material to be securely fixed on the work surface without the need for mechanical clamps, which minimizes movement and vibration of the workpiece.
- **Rugged Design**: The housing is made of high-quality materials to reduce vibrations and improve stability, even during long-term operation at high speeds.
- **Spindle cooling system (air or water)**: Ensures stable spindle operation, preventing it from overheating during long operations.

1.3 PURPOSE OF THE EQUIPMENT

WATTSAN M1 is designed to perform the following types of processing:

- **Milling**: Suitable for both simple and complex products, and can handle materials of different densities.
- **Engraving**: Provides high detail and accuracy when engraving on acrylic, wood, and other materials.
- **Profiling and contour cutting**: Ideal for creating complex contours and shapes.

1.4 APPLICATIONS

WATTSAN M1 CNC router is used in various industries**:**

- **Furniture and décor production**: Creation of interior elements, furniture facades, decoration of furniture items.
- **Advertising Industry**: Production of advertising signs, letters, logos and other advertising structures.
- **Mold Making**: Used to create molds and other complex components.
- **Souvenir & Art**: Suitable for the production of decorative products, souvenirs and art products made of wood and plastic.
- **Plastic and acrylic processing**: Allows you to quickly and accurately cut and engrave acrylic sheets, which is important for creating light boxes, plaques and other products.

1.5 BASIC OPERATING REQUIREMENTS

Before you begin, make sure that all the requirements are met:

- Connected ground: Ground resistance <4 Ω.
- It is necessary to install a mains voltage stabilizer to stabilize the voltage of the machine.
- Good ventilation is required to prevent the accumulation of dust and combustion products.
- To cool the spindle, it is necessary to properly configure and control the operation of the chiller. It is a specialized equipment that cools and circulates water and requires the use of distilled water only.
- To prevent fire, the workplace must be equipped with a suitable fire extinguisher.
- There should be a free area around the machine of about 1 m on each side.

CHAPTER 2. SAFETY ENGINEERING

2.1. OVERVIEW

Proper safety precautions when operating the milling machine are essential to prevent accidents, protect the operator and ensure the safe operation of the equipment. Failure to follow these guidelines may result in personal injury, damage to the machine, or disruption of the production process.

Before operating the machine and performing daily maintenance, the operator should read this chapter carefully, learn the safety precautions and requirements of the machine, and follow the appropriate precautions.

2.2 GENERAL SAFETY REQUIREMENTS

- Personnel working with this equipment must know and remember all the safety requirements for working with milling equipment and obey the safety requirements adopted at the enterprise, and the requirements for the management of the corresponding equipment.
- The operator is not allowed to leave the workplace while the equipment is in operation.
- The user must ensure that the material to be machined is suitable for milling in order to avoid risks to the life and operation of the equipment
- Keep the work area clean and provide adequate lighting.
- Do not wear loose-fitting clothing, gloves, bracelets, necklaces, or jewelry.

⚠	**It is forbidden to work on faulty equipment. If a fault is detected, turn off the equipment and unplug it. Inform the specialists. Do not repair the equipment yourself.**

2.3 PRECAUTIONS FOR MACHINE OPERATION

- Familiarize yourself with the location of the emergency "STOP" button and make sure it is available for immediate use in the event of an emergency.
- Make sure that the selected tool is securely locked in the spindle. Unreliable fixation can lead to tool ejection and damage to the workpiece.
- When working, keep a safe distance from the cutting area and do not touch the spindle. To replace the tool, wait for it to stop completely.
- Use only the tools and accessories that are provided for installation with this equipment. Never use unsuitable or damaged tools.

2.4. ELECTRICAL SAFETY

- Make sure the machine is securely grounded to prevent static electricity and reduce the risk of electric shock.
- Make sure the correct AC supply voltage is used before applying power to the unit. Using the wrong voltage may damage the installation.
- Never use the device in a humid or wet environment. Do not touch electrical contacts and switches with wet hands to avoid electric shock.
- Do not open the electrical cabinet or change the machine parameters without consulting the manual. If you need to change something, then these changes must be approved with the equipment supplier. Before modifying, record the original values so that the machine can be restored to its original parameters if necessary.
- Always turn off the device when not in use. Never leave the machine running unattended.
- Before performing any maintenance or repair work on the machine, make sure that the equipment is completely disconnected from the power supply.

After turning off the power to the machine, you must wait at least 5 minutes, and only then you can touch the electrical circuit of the machine. For a period of time after the power is turned off, there may be a high voltage in the machine's electrical system, which can cause harm to people and equipment.

2.5. OBLIGATIONS OF THE OPERATOR

- The operator must undergo special training in order to start working on the machine.
- Follow the instructions for regular maintenance of the appliance to keep it operational and prevent accidents.
- After completing each work shift, remove chips and dust from the surface of the table and moving parts of the machine to avoid the accumulation of waste.

CHAPTER 3. APPEARANCE OF THE MACHINES

3.1 MACHINE DIMENSIONS

Wattsan M1 6090

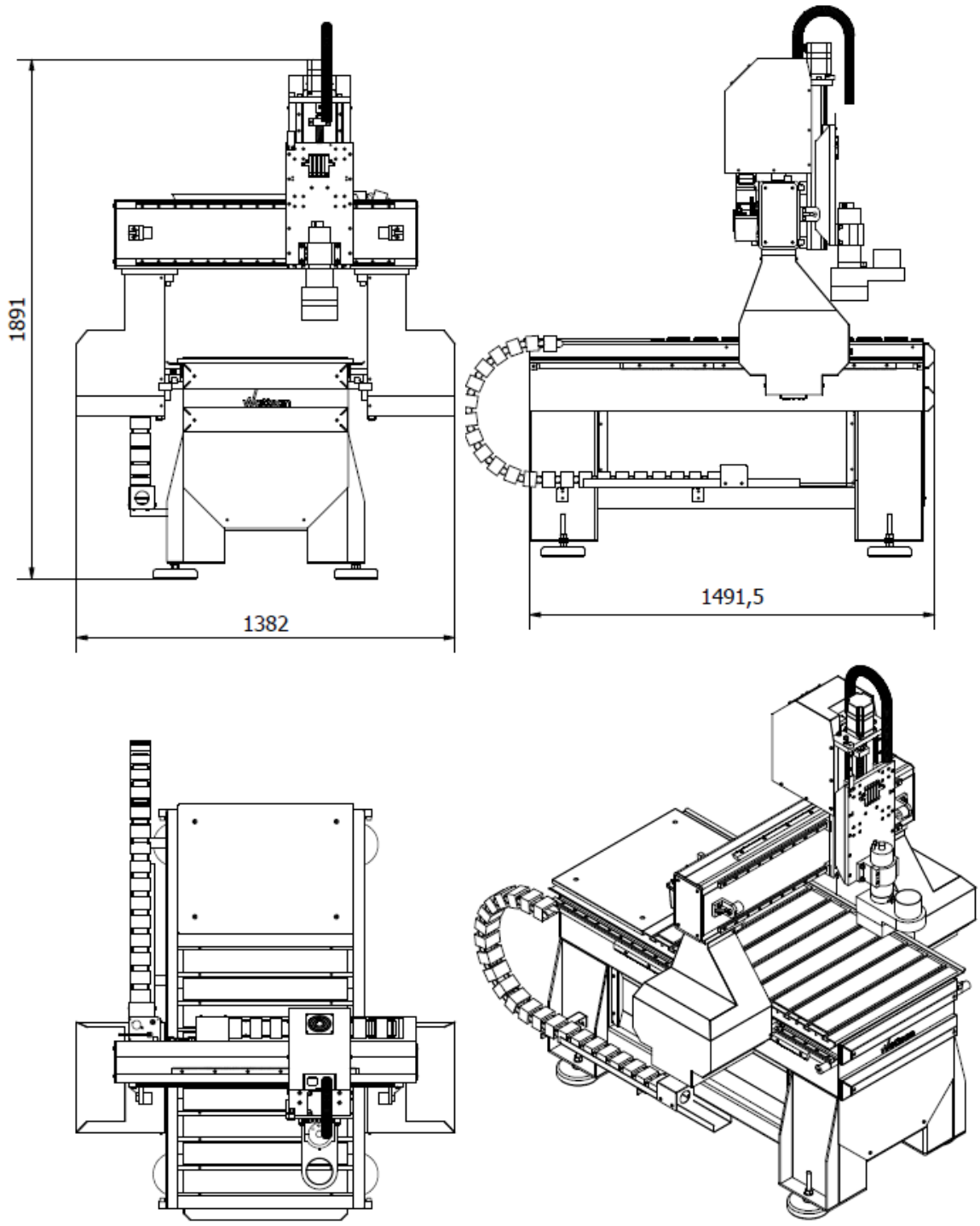

Wattsan M1 1313

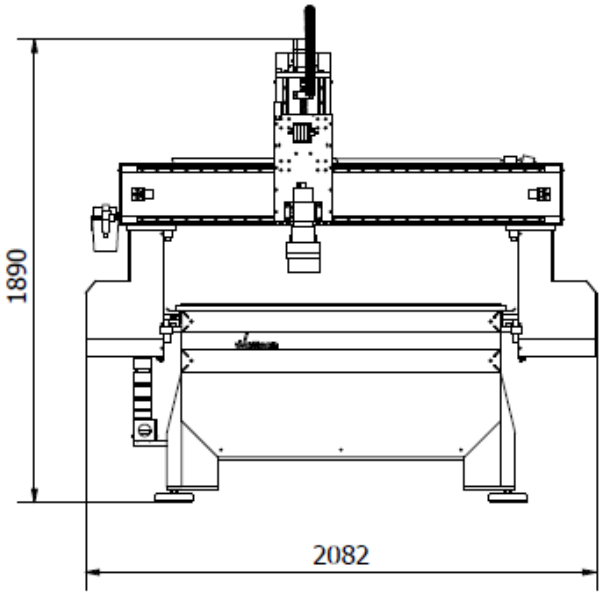

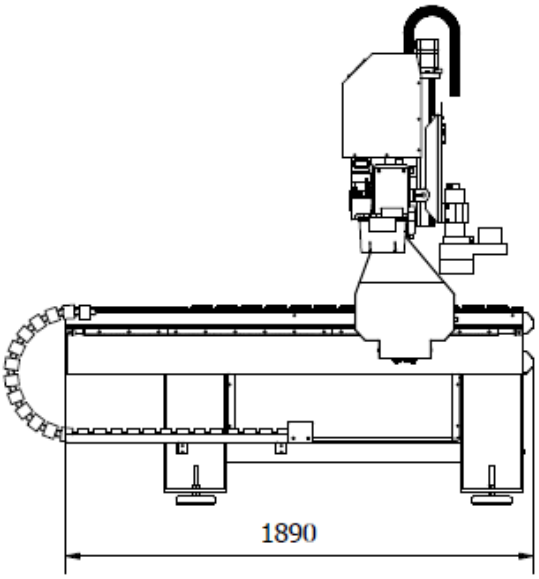

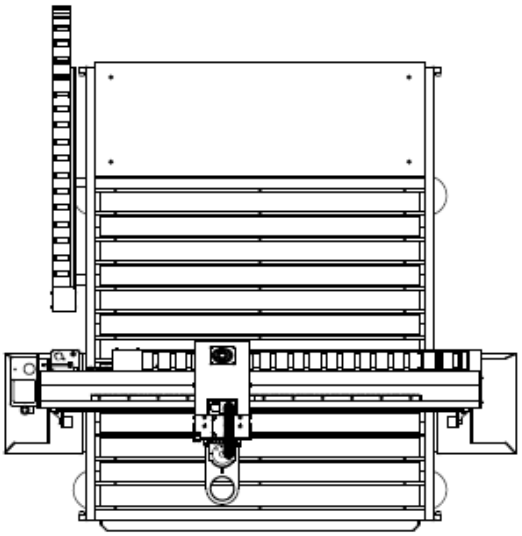

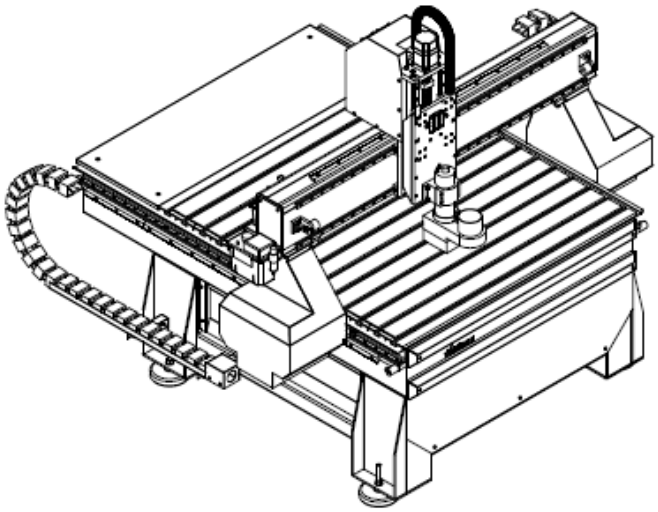

Wattsan M1 1325

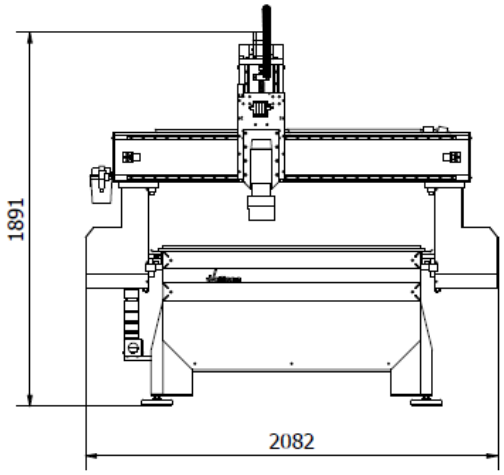

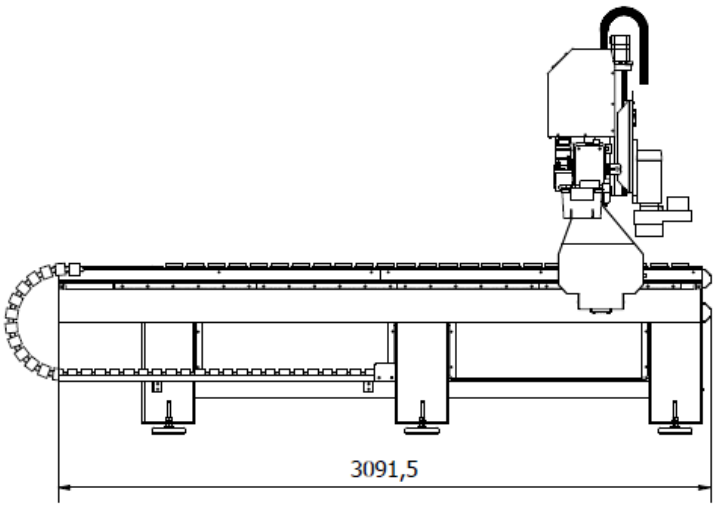

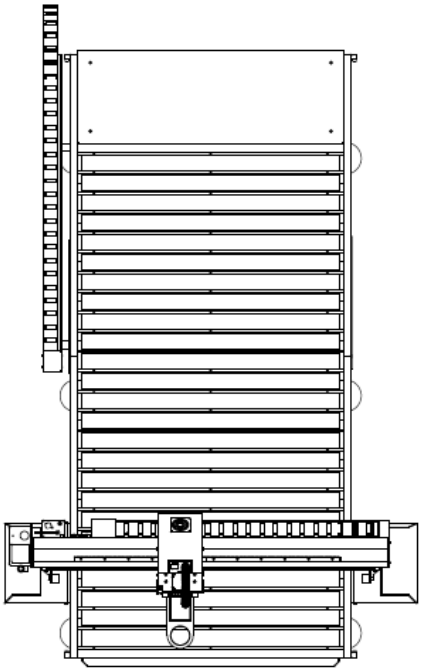

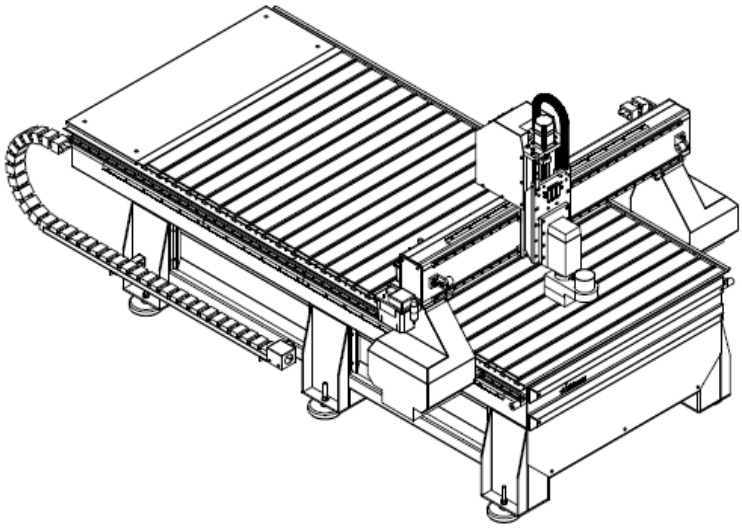

Wattsan M1 1616

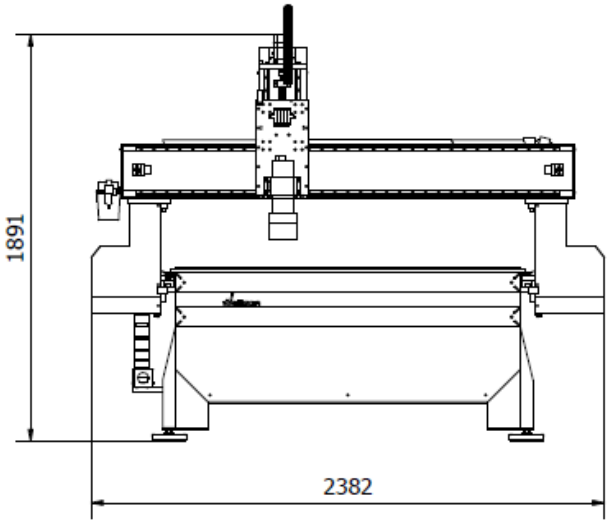

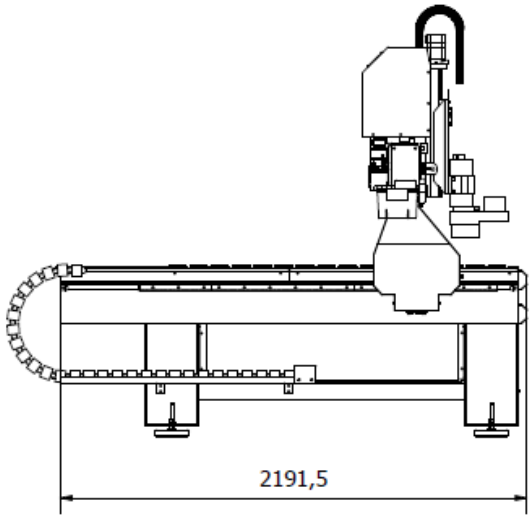

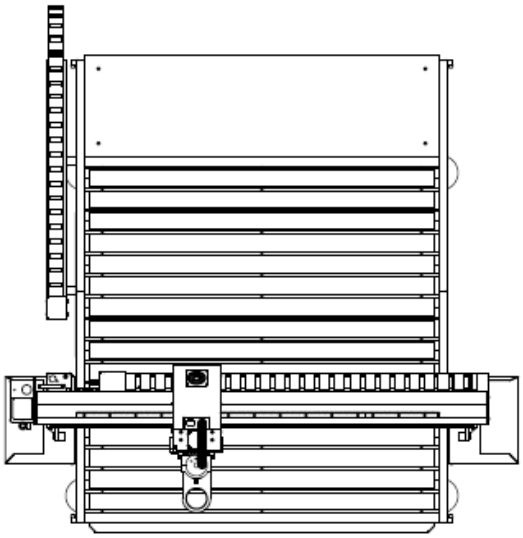

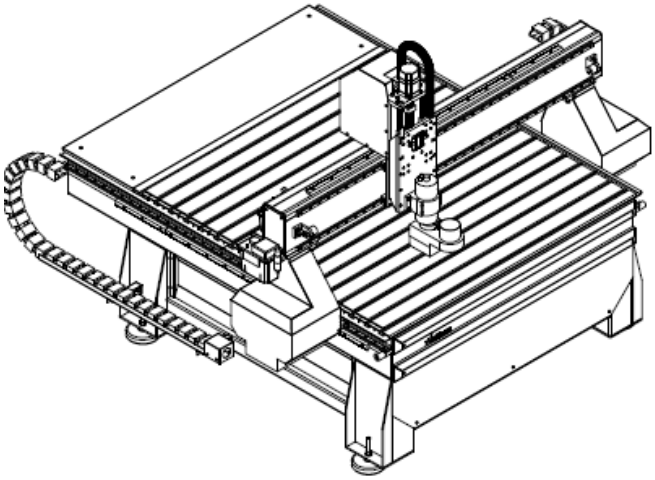

Wattsan M1 2030

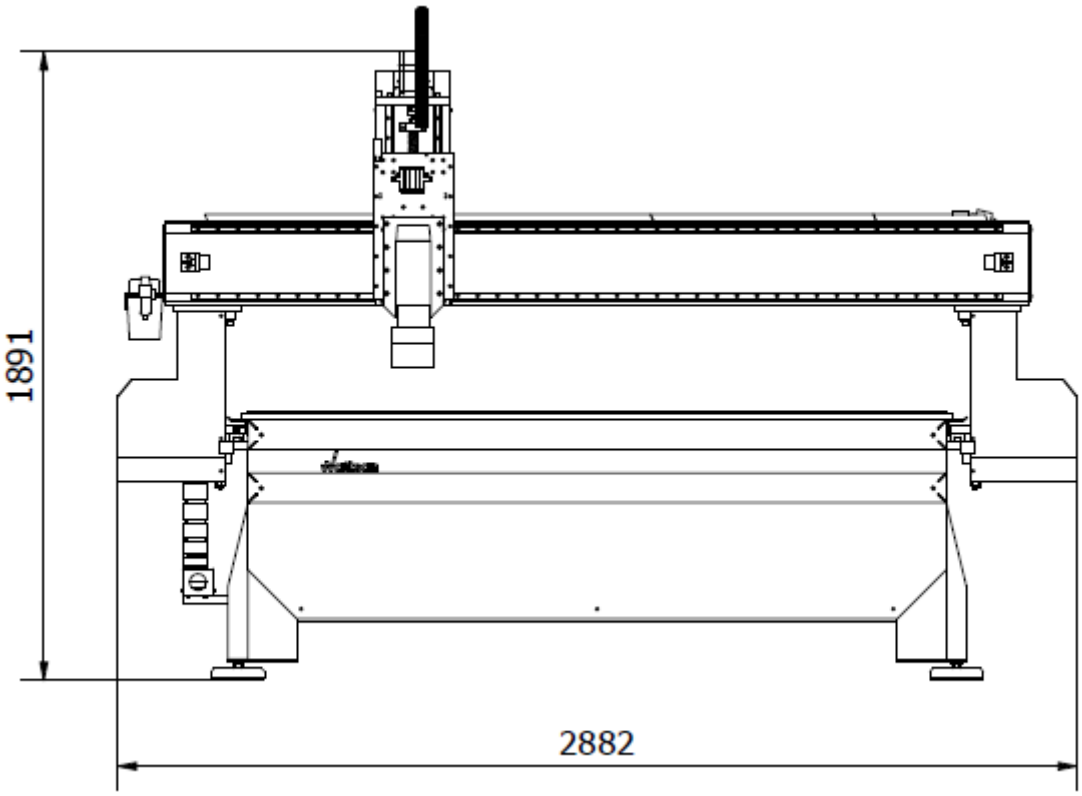

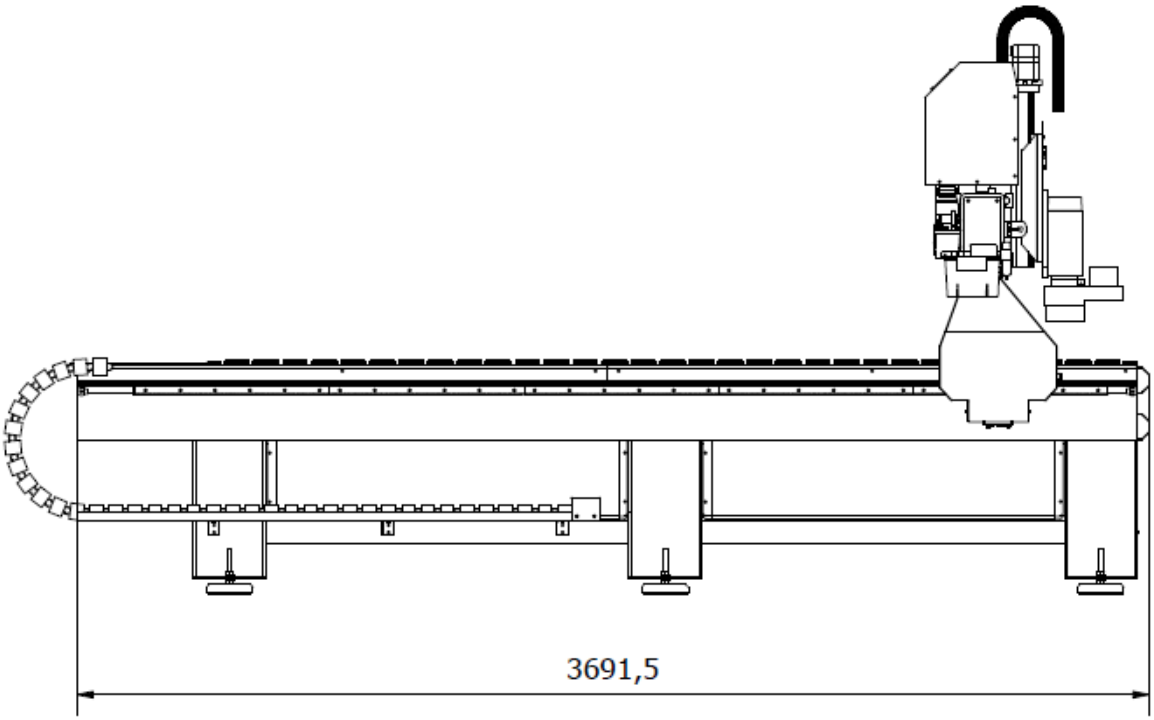

Wattsan M1 2040

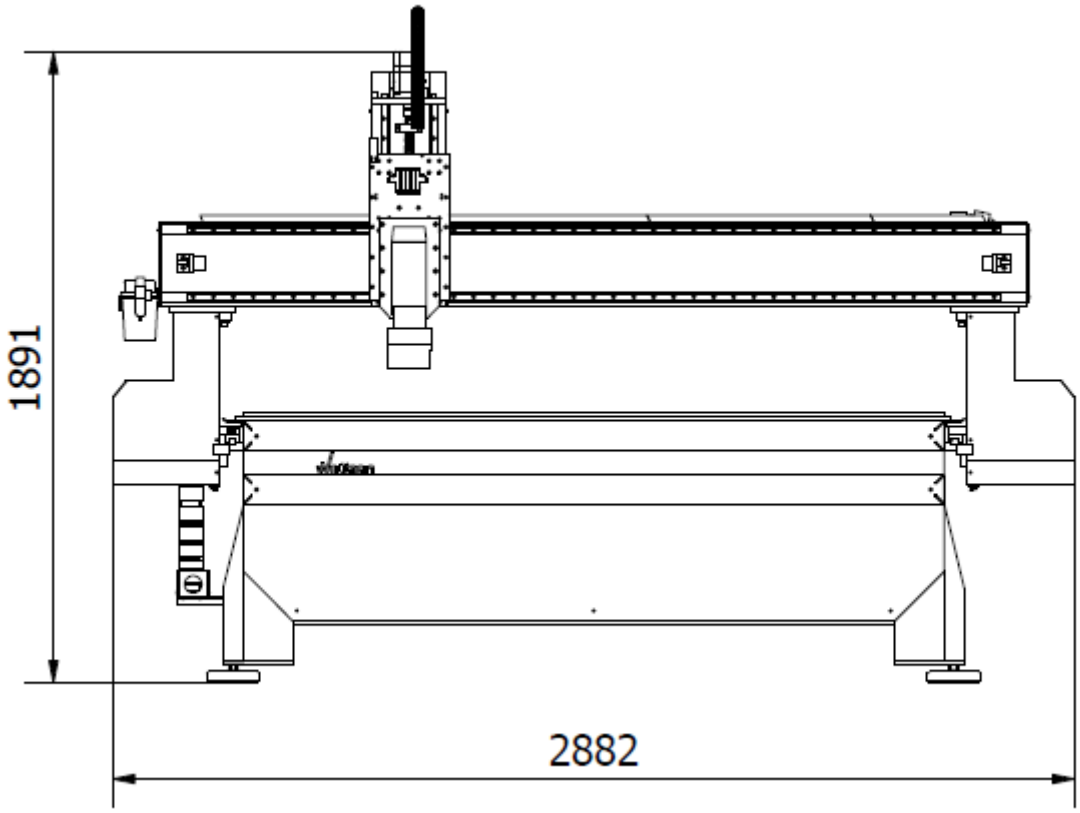

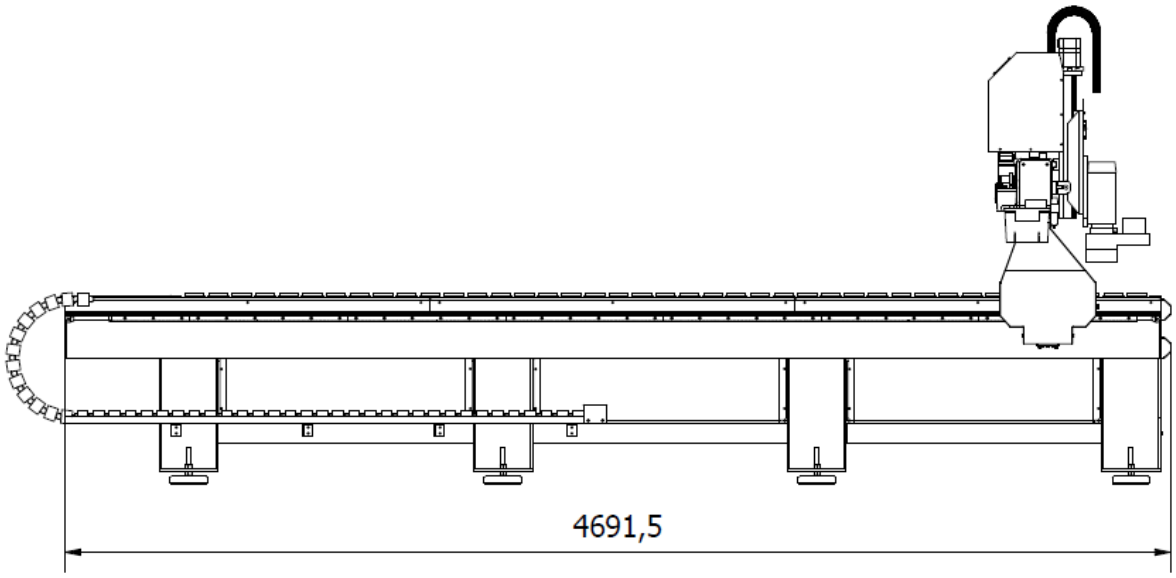

3.2 CONTROL CABINET WITH CONTROL UNIT

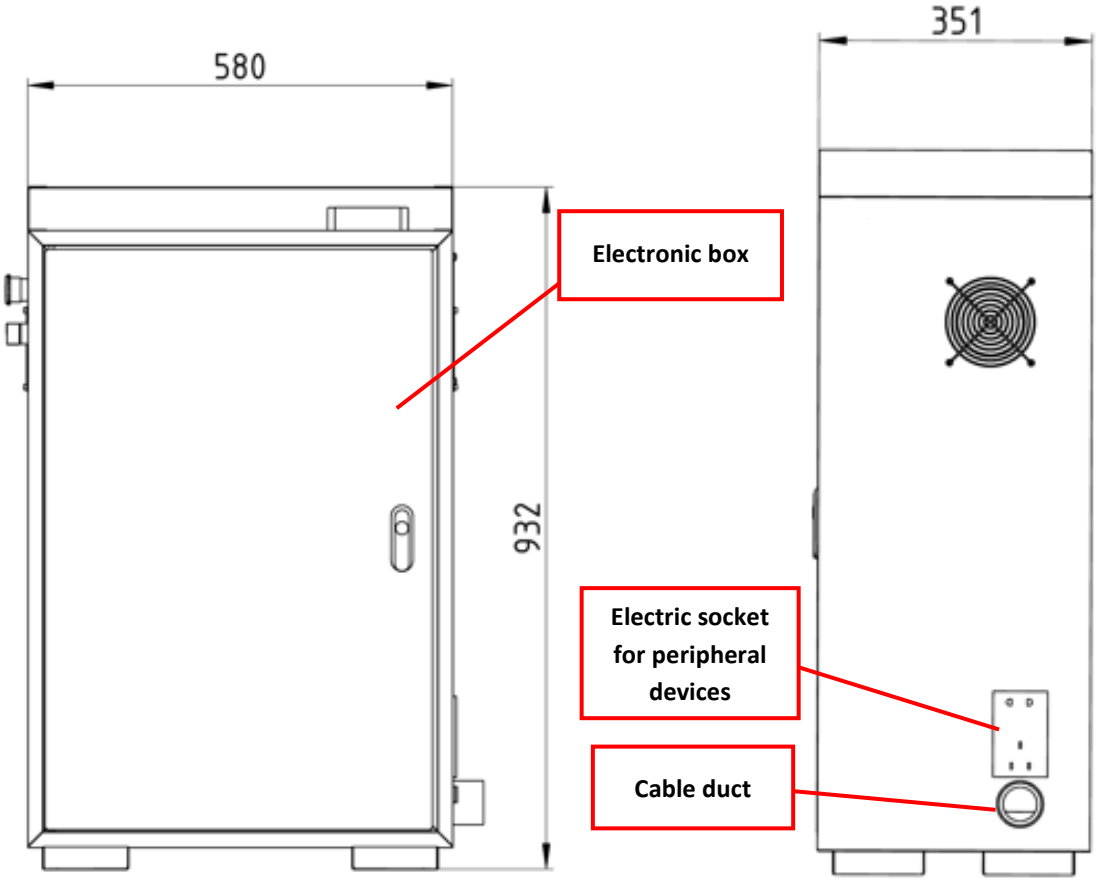

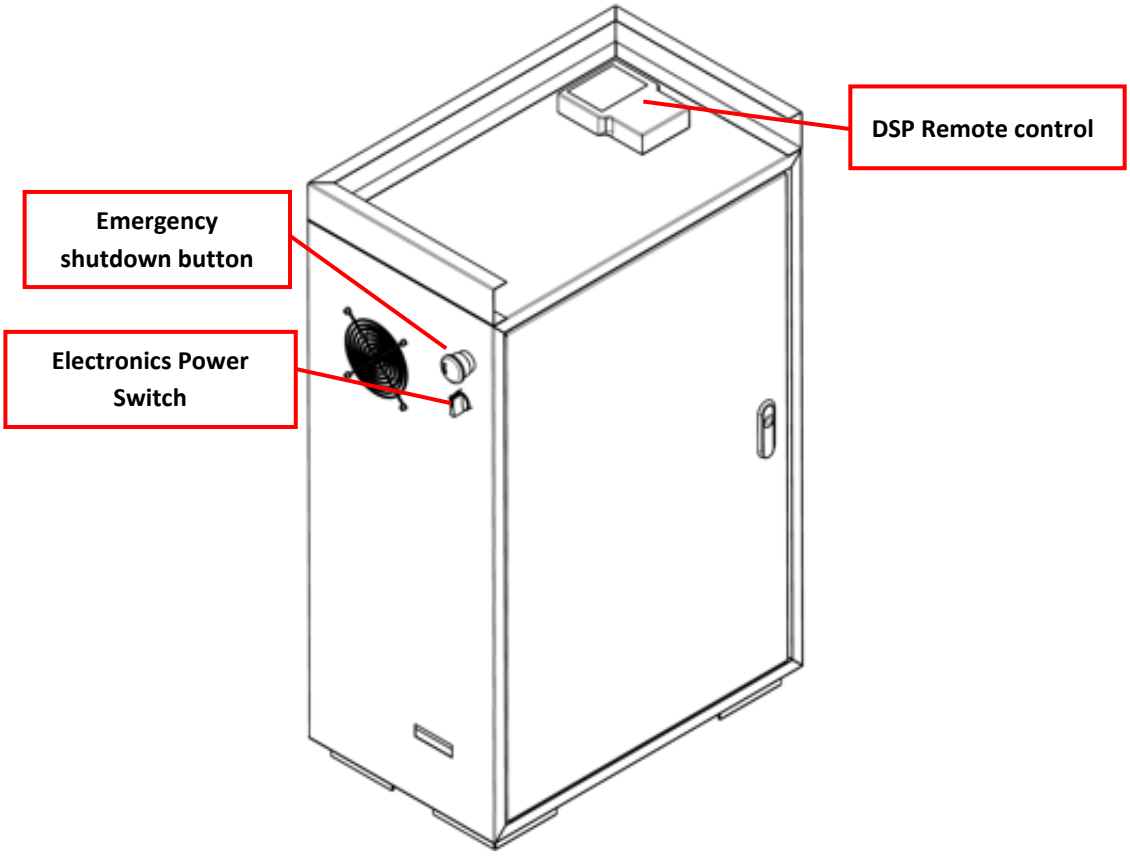

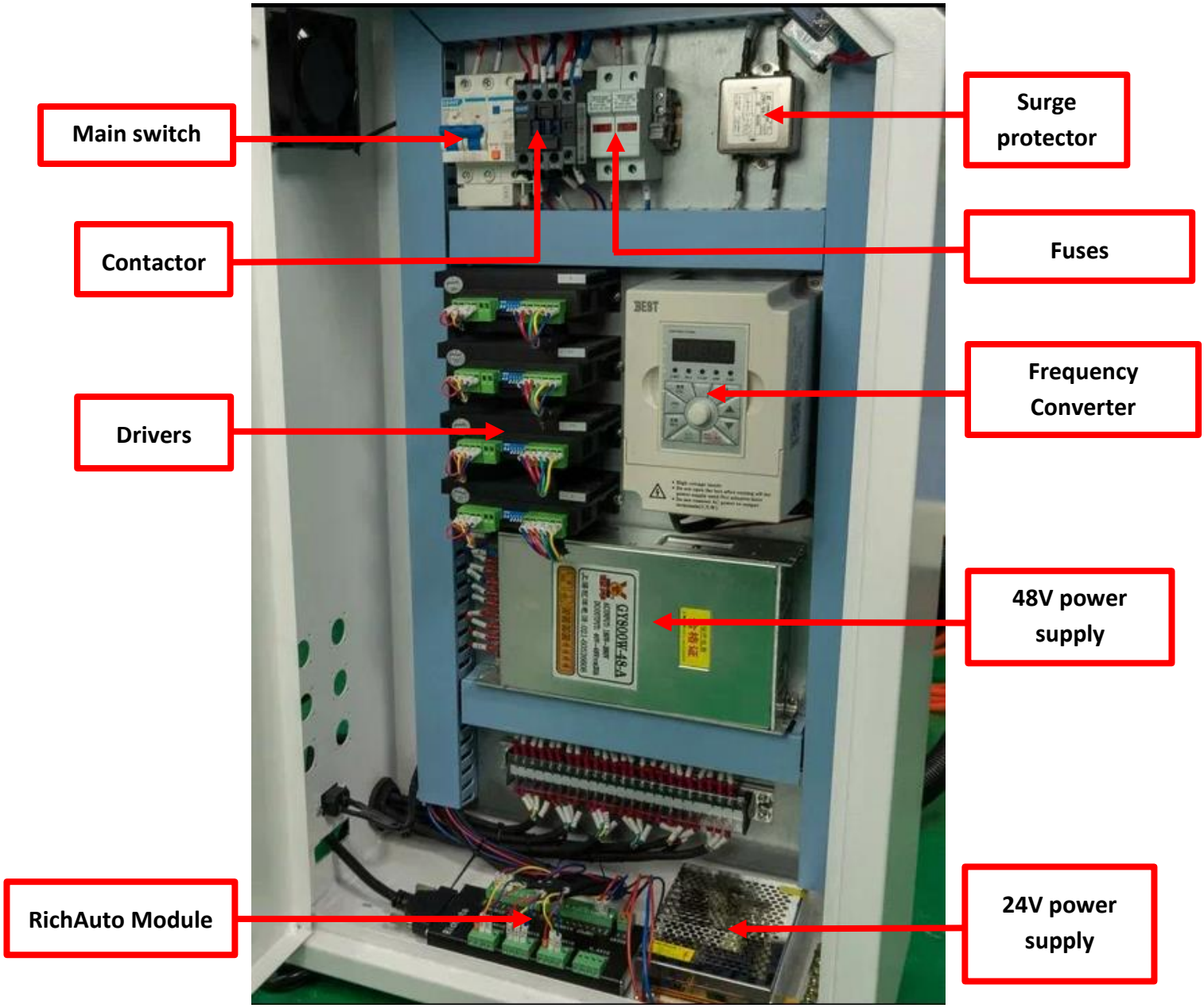
Main switch
Contactor
Drivers
RichAuto Module
Surge protector
Fuses
Frequency Converter
48V power supply
24V power supply

CHAPTER 4. ACCEPTANCE AND UNPACKING

4.1 GENERAL INFORMATION

We strongly recommend that only specially trained personnel unload the machine.

Before unloading the equipment, carefully inspect the cargo and packaging for damage, check the number of pieces declared in the bill of lading. In the presence of damage and/or the absence of cargo packages, we recommend that you draw up a commercial act, since without this document, the insurance company has the right to refuse to pay compensation.

4.2 UNLOADING EQUIPMENT BY FORKLIFT OR STACKER

When unloading equipment using this type of equipment, pay attention to the lifting capacity and length of the forks. Make sure the forks are the right length by referring to the dimensions of the equipment. If you unload from the side, focus on the width of the base of the box/bed. If unloading is carried out through the rear gate - by the length of the box/bed.

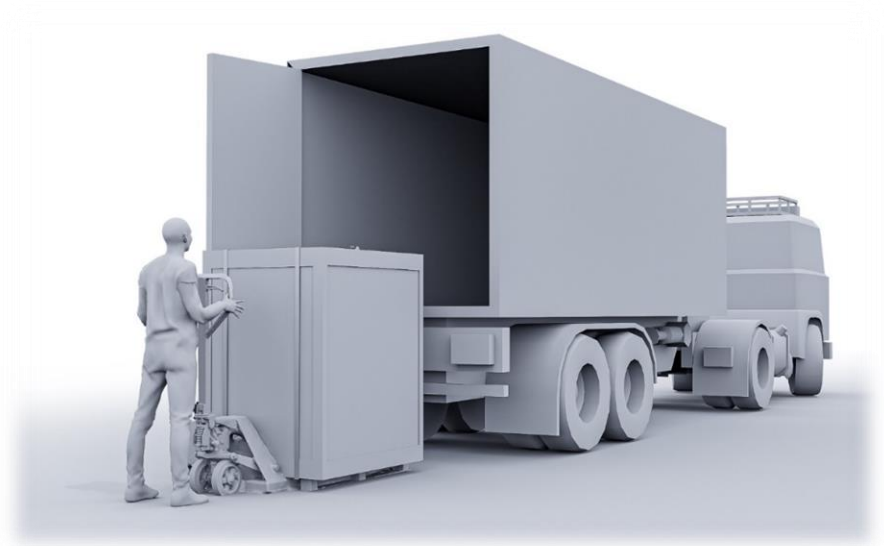

ATTENTION!

1. **Do not stand under a lifted and moving load. Be sure to use a hard hat.**
2. **Avoid sudden movements and jolts when raising and lowering equipment.**
3. **Do not tilt the equipment until the original packaging is removed.**

4.3 UNBOXING

Check the machine and all accessories for external damage when accepting the equipment from the carrier. If possible, unpack the equipment together with a representative of the carrier.

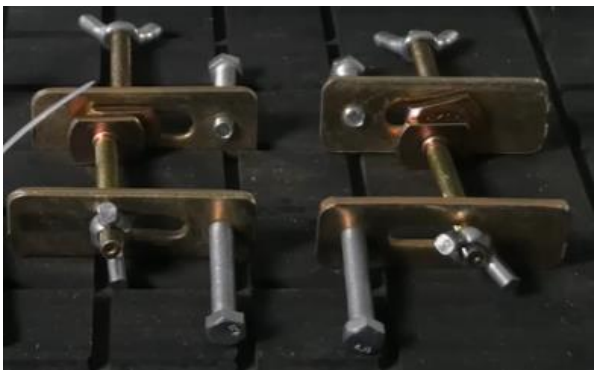

CHAPTER 5. INSTALLATION

5.1 PREPARING THE INSTALLATION SITE

Before installing the machine, make sure that the working area meets all technical requirements:

- **Size and Location**: Make sure that the mounting area is sufficient to accommodate the machine and allows access from all sides for maintenance. At least 1000 mm of free space around the machine on each side is required.
- **Flat surface**: The floor should be level and stable, preferably concrete, to avoid vibrations and distortions during the operation of the machine.
- **Lighting**: The work area should be well lit so that the operator can easily control the processing process.
- **Temperature and humidity**: The recommended temperature for the operation of the equipment is between +10°C and +35°C, with a humidity of no more than 70%. Avoid installation in places with high humidity or near heat sources.

5.2 INSTALLING THE GANTRY

At the request of the customer or due to the peculiarities of transportation, the machine gantry can be delivered dismantled.

Installing the gantry:

1. Remove the boots

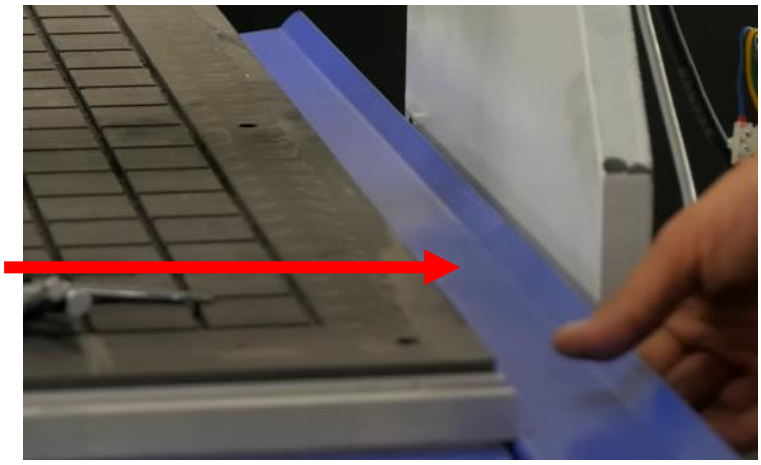

2. Remove the bumpers on both sides of the machine

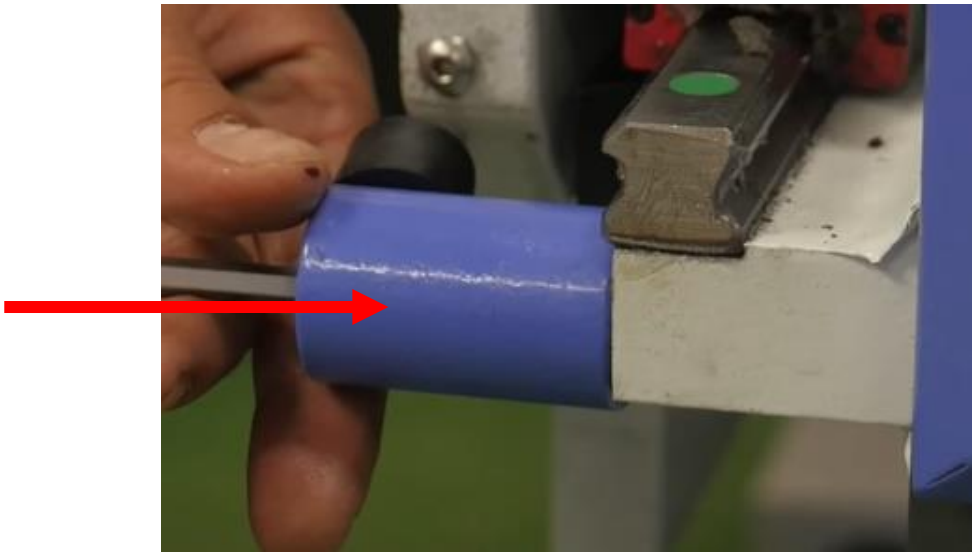

3. Slide the bearings under the gantry

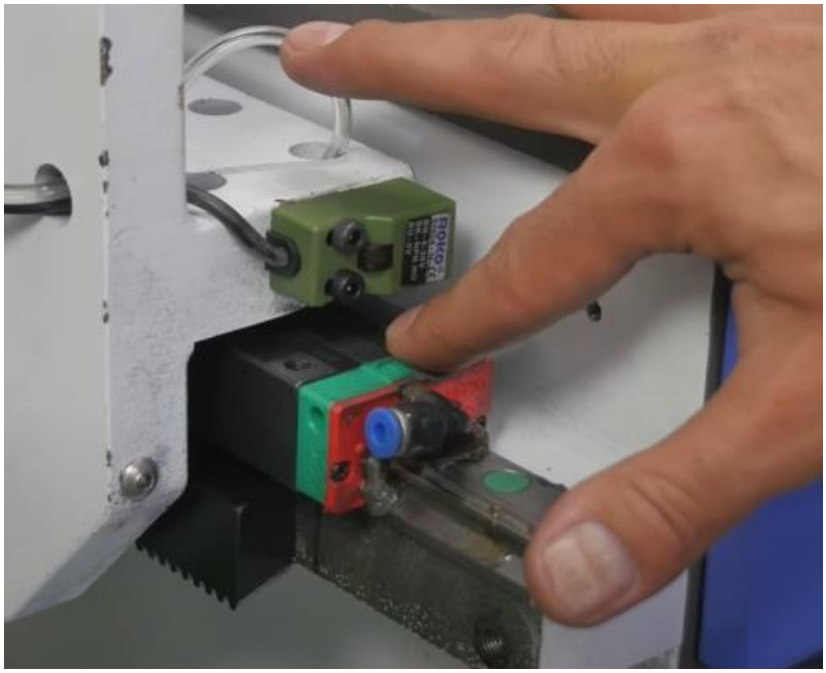

4. Place the gantry on the bearings so that the holes on the gantry and the bearings line up

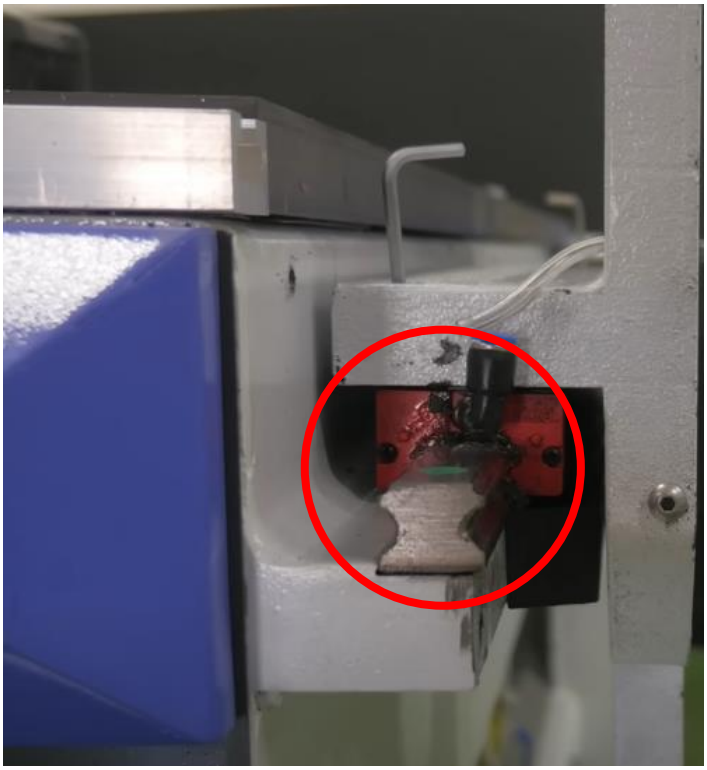

5. Attach the gantry to the bearings

6. Connect the lubrication pipes

5.3 INSTALLING STEPPER MOTORS

1. Secure the motors without stringing the screws

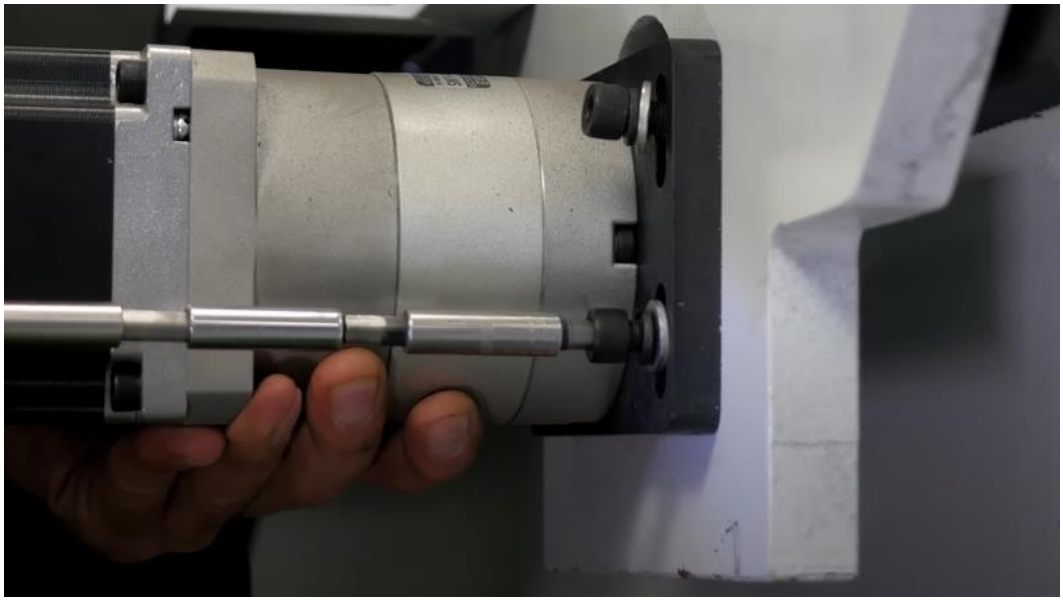

2. Lift the motor so that the motor drive rests firmly on the helical rack and tighten the screws.

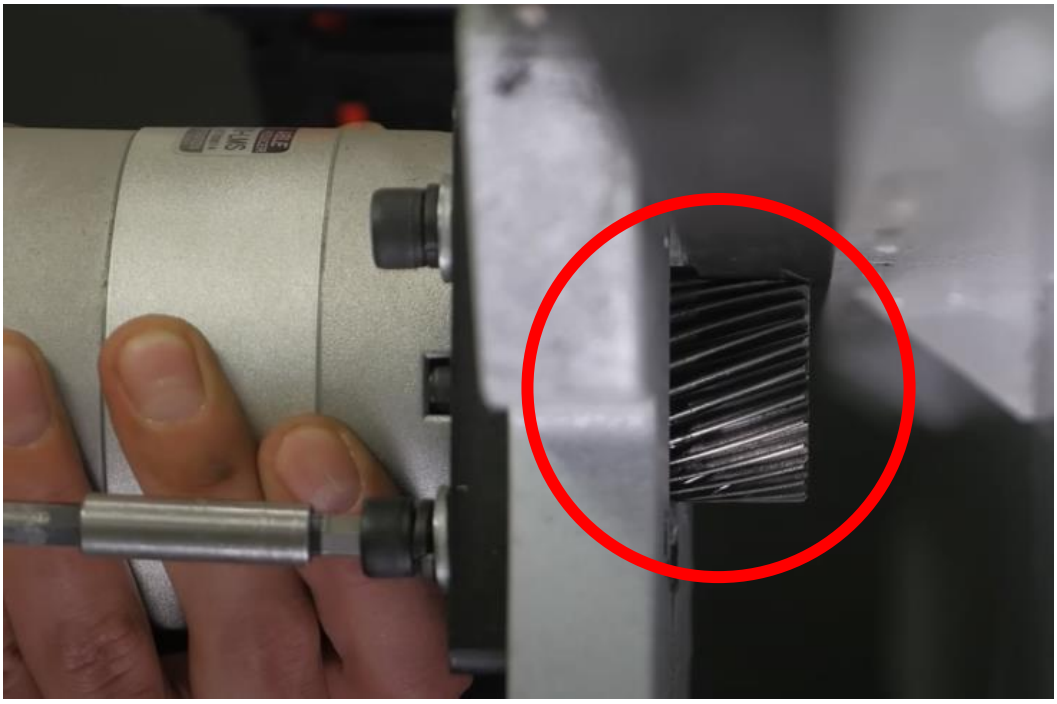

3. Connect the motor wires to the terminal according to the color coding of the wires

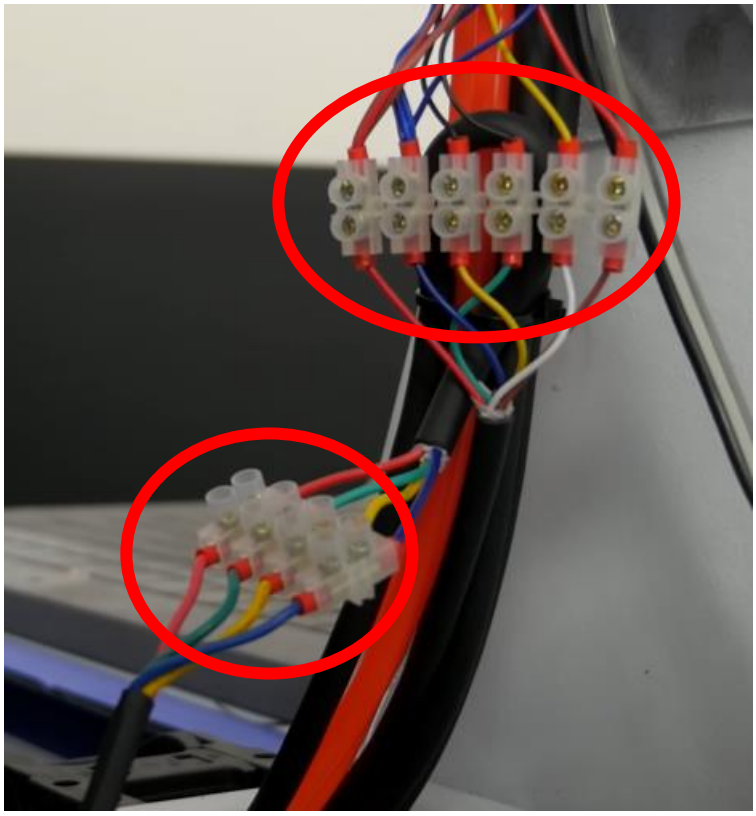

5.4 CONNECTING THE MACHINE TO THE CONTROL UNIT

5.4.1 WIRING CONNECTION

1. Take the cable channel and slide the wires through the hole in the control unit.

2. Connect the wires to the terminal according to the wire markings

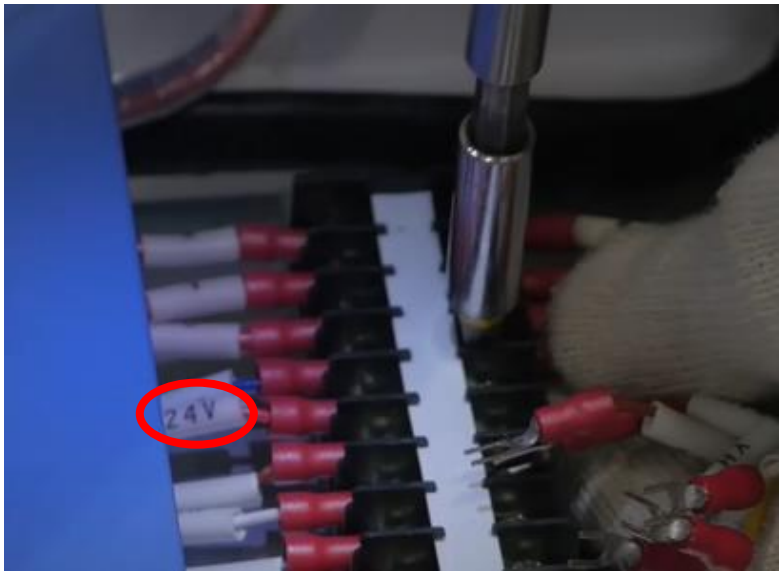

5.4.2 POWER SUPPLY CONNECTION

1. Locate the main switch in the control cabinet and connect the power supply to the switch:

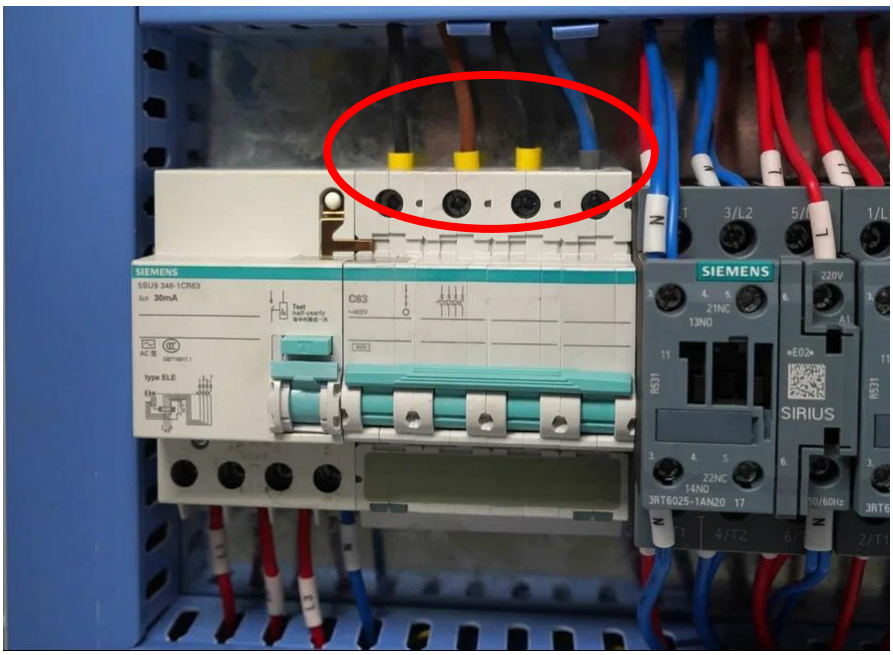

2. Connect the ground cable to the machine's ground bus.

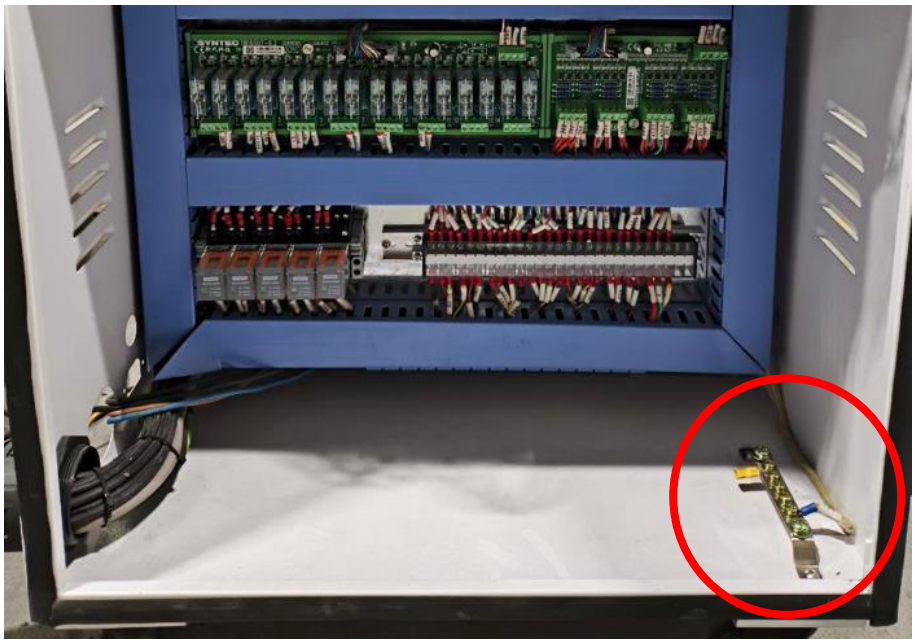

!	It is important to connect equipment through a voltage stabilizer! If the voltage fluctuates, the equipment will not work properly. If the voltage is too high, the electronic components of the machine may be damaged!

5.4.3 CONNECTING THE RICHAUTO CONTROLLER

Connect the cable to the connector of the controller board:

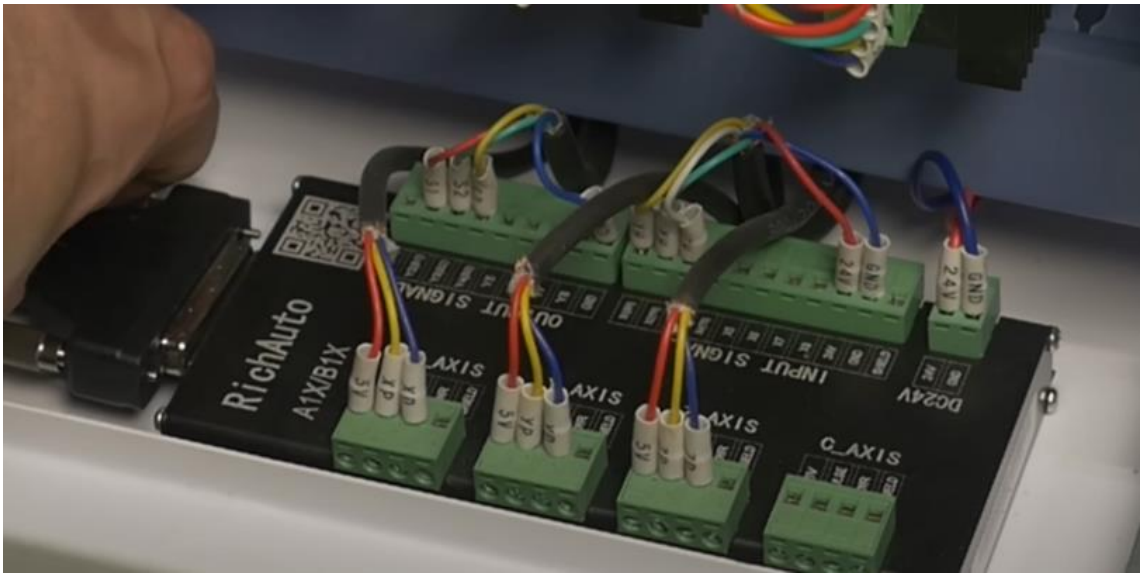

Connect the other end of the cable to the controller:

5.5 INSTALLING VIBRATION MOUNTS

Vibration mounts are not included as standard, but we strongly recommend installing them.

The frame posts have holes for anchor bolts.

1. It is necessary to raise the machine to ensure the possibility of supplying a vibration support under the support of the machine, for convenience you can use pads.
2. Using the lifting mechanism, set the bed to the desired height, and then, rotating the screw, fix the vibration support. Perform similar actions for each vibration support.
3. Check the evenness of the machine installation with a laser or bubble level.
4. After reaching the desired height, it is necessary to fix the vibration support by screwing the nut with the washer from the kit onto the screw and performing the desired tightening torque.
5. Remove the lifting mechanisms

5.6 CONNECTING THE CHILLER

5.6.1 CONNECTION PROCEDURE

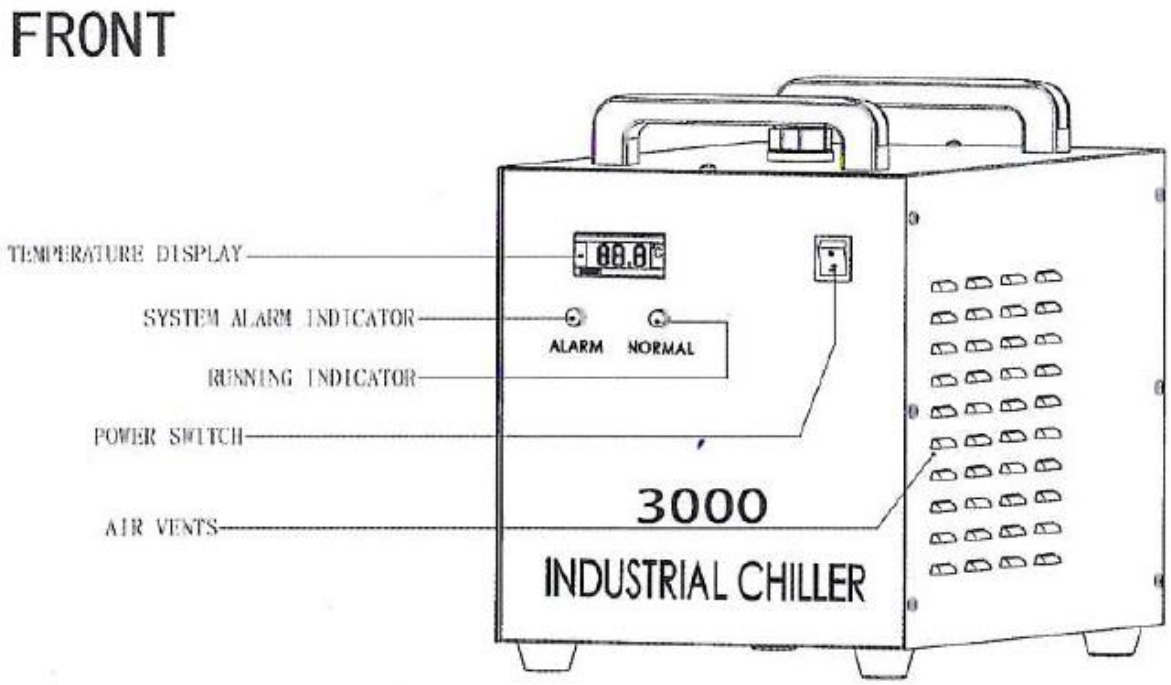

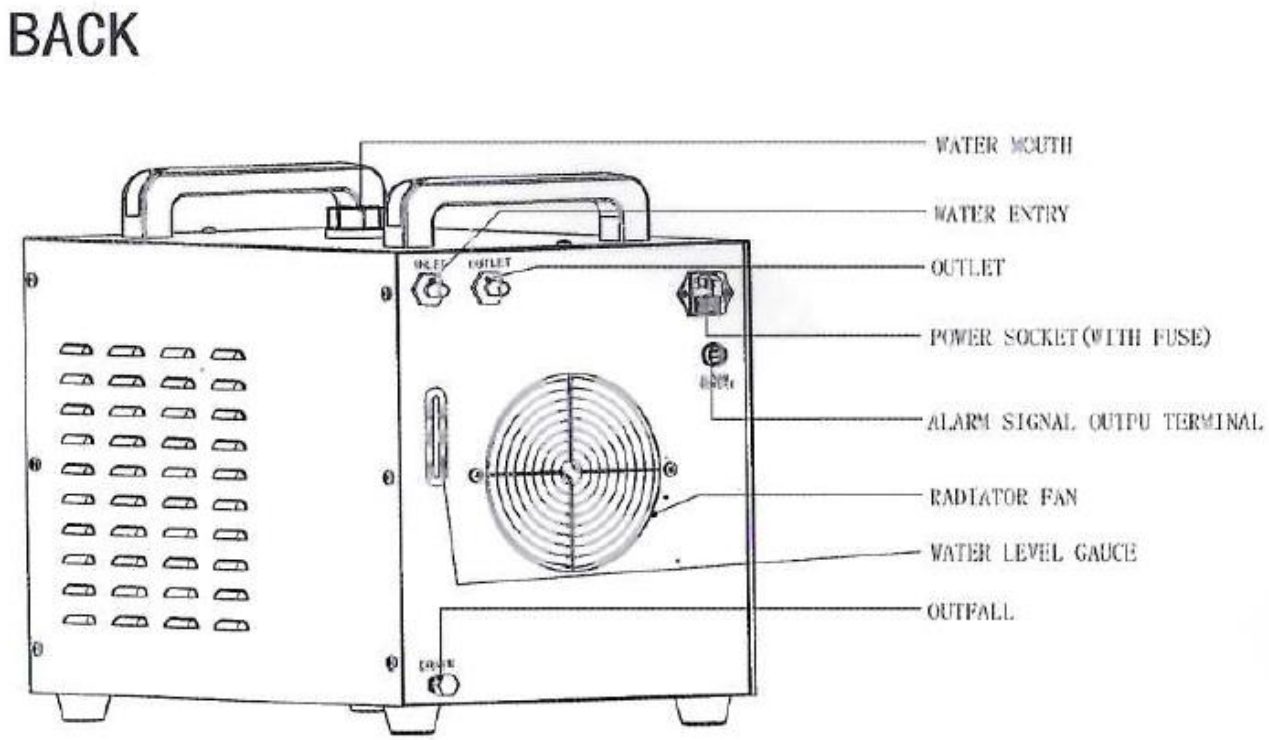

1. Take the two silicone hoses that come with the kit and connect them to the Inlet and Outlet fittings of your chiller:

2. Insert the machine cooling system hoses into the chiller silicone hoses:

3. Tighten the hose connections with clamps:

4. Tighten the chiller drain plug until it stops.

5. Unscrew the filler plug of the chiller and pour distilled water into the chiller in the amount according to the chiller manual. Check at the back of the chiller that the water level is within the green zone. If the water level is below the green zone, add water, if it is higher, drain the excess water by unscrewing the chiller drain plug. And screw on the chiller fill plug.

6. Plug the chiller power cable into the chiller and a separate outlet at the other end. Be sure to connect the power supply to the chiller through a voltage stabilizer.

!	Hoses should not be twisted or pinched for normal water inflow and should be tightly connected to avoid water leakage!

5.6.2 CHILLER SETUP

After installing the chiller, it is necessary to configure it if a configurable controller is installed on the chiller

Please set up the chiller according to the instructions attached to it. The water temperature should not exceed 25°C.

5.7 MATERIAL INSTALLATION

5.7.1 FASTENING WITH PRESSURE PLATES

This method of fastening can only be used if the outer edges are not processed. To protect the machine bed, place a film under the material to be processed.

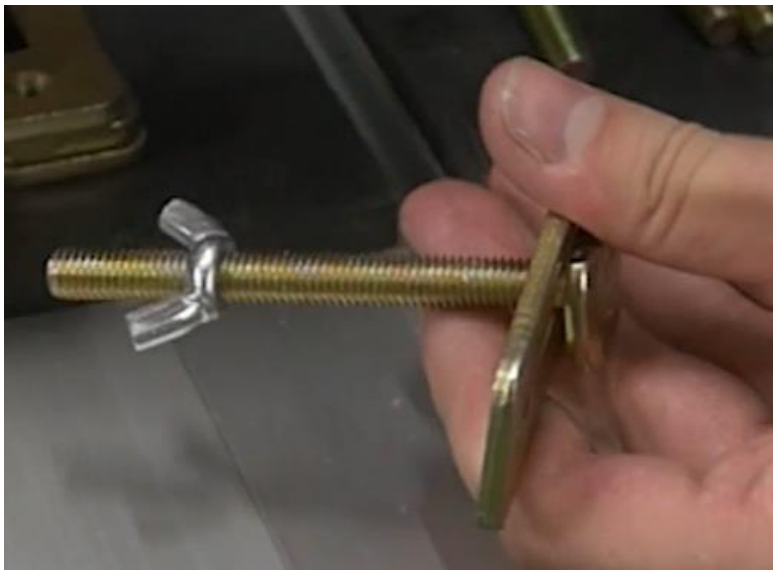

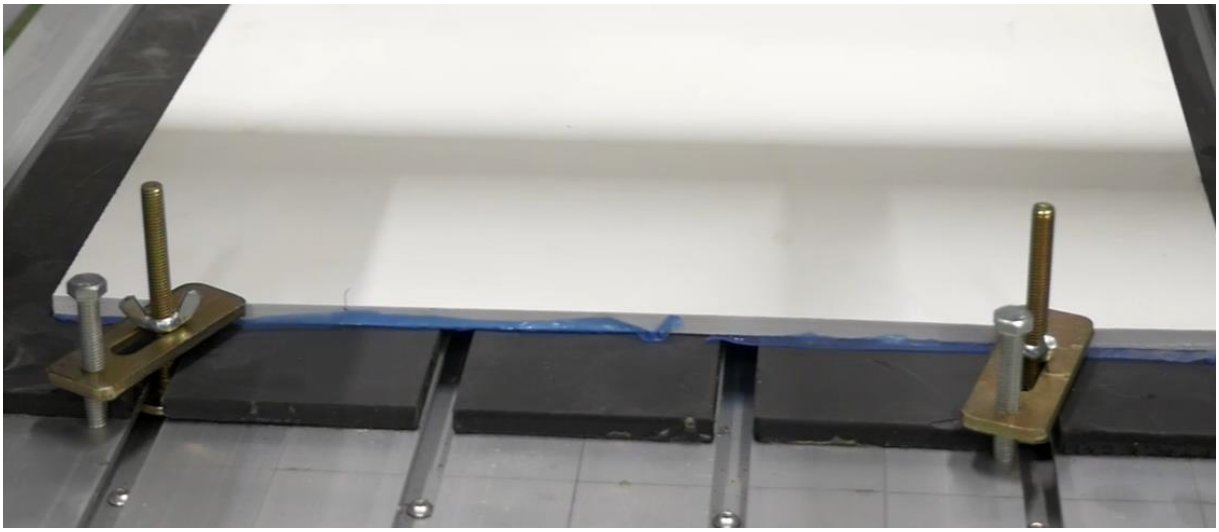

1. Insert the screw into the plate and tighten the nut:

2. Screw in the bolt:

3. Level the plate with a bolt and tighten the nut:

5.7.2 VACUUM TABLE (IF EQUIPPED)

Vacuum tables are used to quickly fix sheet material on the surface of the table**.** Due to the strong thrust, the vacuum table not only fixes, but also aligns the processed materials. For a high-quality work result, it is very important that the surface of the processed material is even.

The vacuum table is divided into zones, each of which is activated separately by a ball valve.

These areas are connected to the pump using reinforced PVC tubing

To isolate the zone, you need to use a special rubber gasket, which is inserted into the grooves on the desktop. It is important that the rubber gasket is laid only along the grooves of the vacuum zone that you are going to insulate.

For through-cutting on a vacuum table, the most commonly used substrate is the so-called sacrificial table.

It is designed to protect the table itself from damage and comes in two types: perforated and solid.

Perforated is usually two PVC sheets with holes through which air holds the material or part.

Solid is used with pumps that are capable of creating a vacuum close to 1 atm. Usually, a porous material such as MDF is used - the workpiece is pressed due to the fact that air passes through the pores in the material.

5.7.3 CONNECTING THE VACUUM PUMP

1. Unpack the vacuum pump

2. Install the vacuum adapters

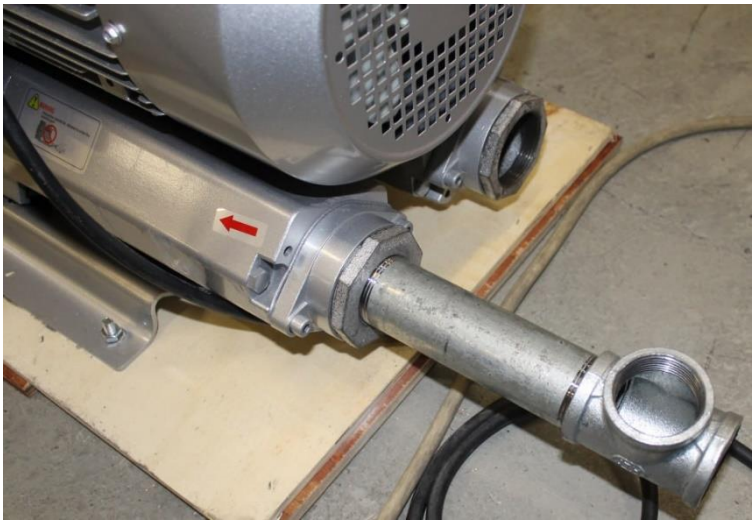

3. Install the air filter and safety valve to the adapter, connect the hose from the machine to the filter outlet

4. Open the cap, which is located on top of the pump, and connect the 380 volt power. It is necessary to connect according to the diagram located under the cover.

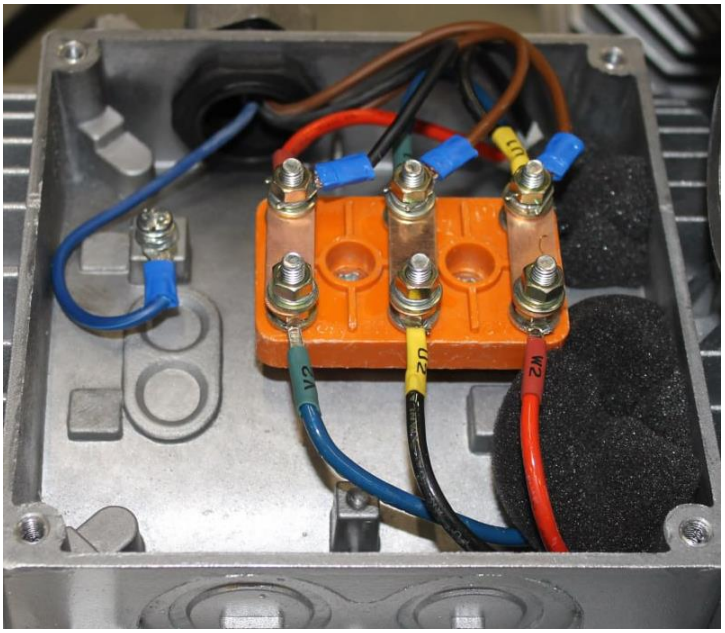

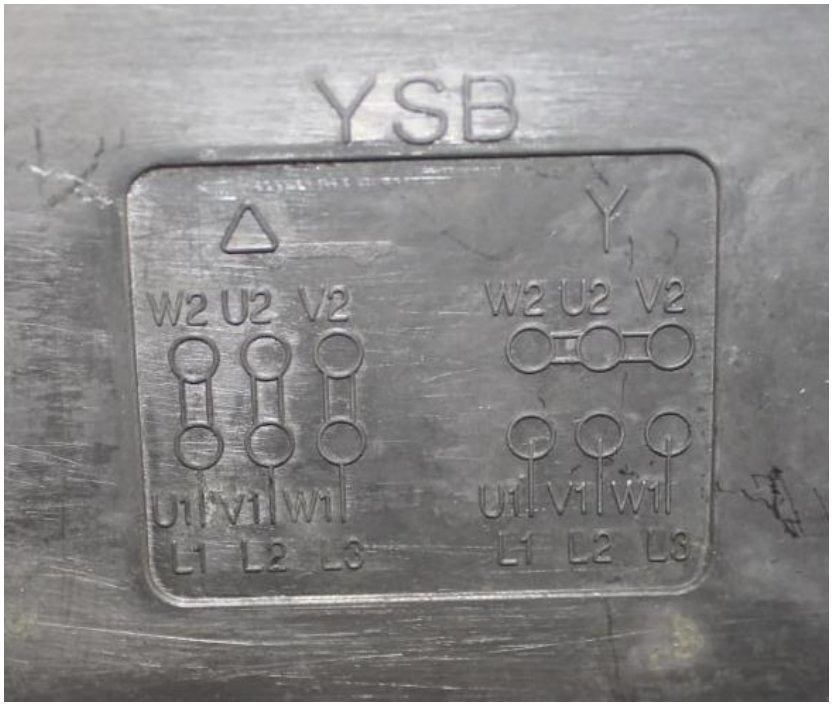

5. Remove the caps from the holes on the vacuum table. Turn on the pump, put the ball valves on the machine in the open position, and check if air is being sucked in. If, instead of suction, the pump, on the contrary, blows air, then swap any 2 of the three power wires.

5.8 CENTRALIZED LUBRICATION SYSTEM

A centralized lubrication system makes the machine much easier to maintain. Before starting the machine, you need to adjust the lubrication system.

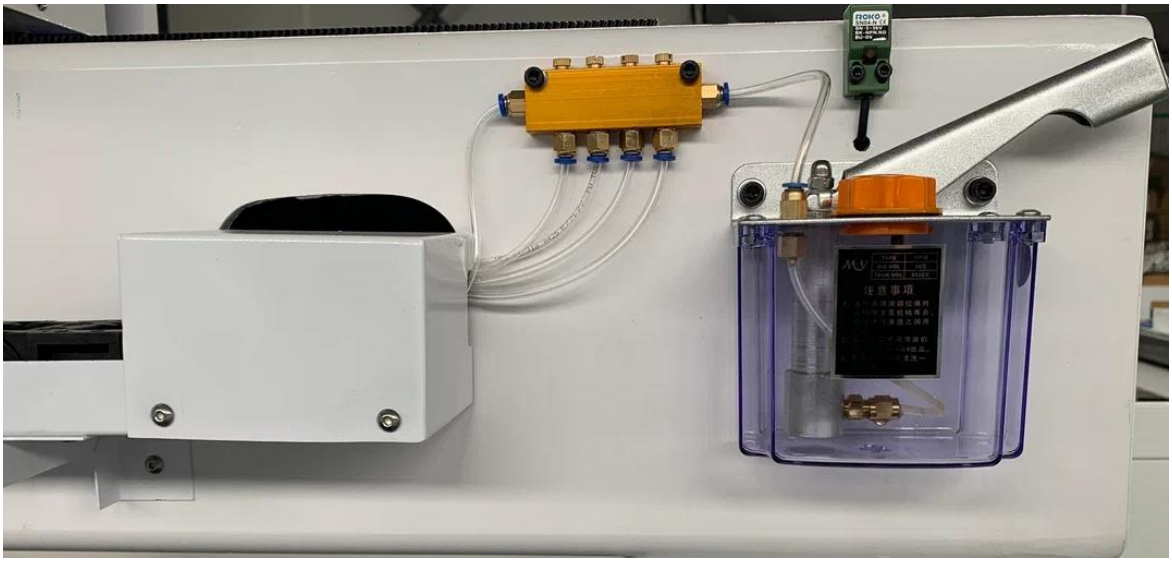

Using a screwdriver, tighten and unscrew the screws of the lubrication distributors so that all bearings are supplied with the same amount of lubricant. You also need to set a sufficient tightening of the screws so that the grease does not flow back into the barrel.

For lubrication, it is recommended to use a high-quality oil with a viscosity of SAE 30

5.9 CONNECTING THE COMPRESSOR (OPTIONAL)

For the pneumatic tool changer system (for the ATC spindle) to function, a compressed air source (air compressor) must be connected to the machine.

- Take the hose coming from the compressor and connect it to the machine's filter system. Fix the connection with a clamp. Turning the screw, set the pressure in the range of 6-8 bar.

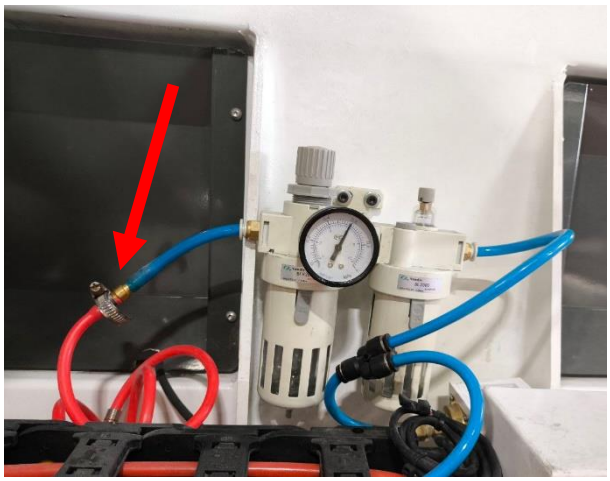

	For the system to work, the pressure value must be at least **6** bar (0.6 MPa). The recommended range is 6-8 bar.

- Set the pressure gauge at the back of the spindle body to 4-6 bar.

5.10 CONNECTING THE COOLANT SYSTEM (OPTIONAL)

The coolant system is used to cool and lubricate the tool and the material being processed.

Coolant is an option on these machines.

Connection:

1. Locate the clear hose on the side of the machine. Connect it to the pump.

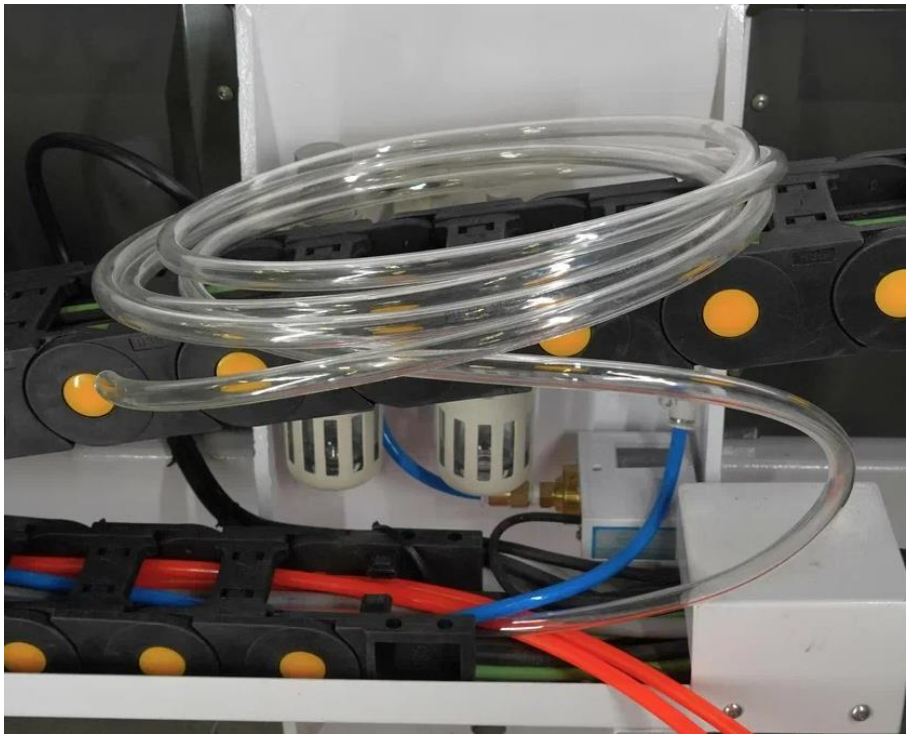

2. Slide one end of the hose into the machine drain and the other end into the pump reservoir

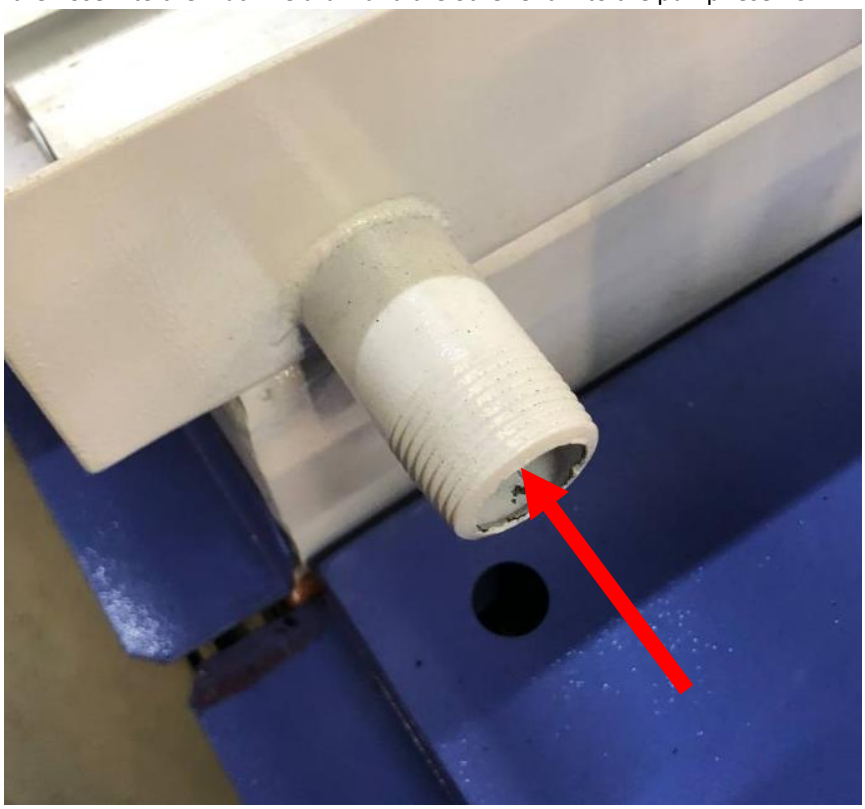

3. Plug the pump into the connector at the back of the machine

5.11 TOOL INSTALLATION

1. Take the cutter and the collet that fits it.

2. Install the collet into the nut until it clicks into place.

	It is recommended to insert the collet into the nut first, and only then the cutter into the collet.

3. Insert the tool into the collet.

	Before installing the nut on the spindle, make sure that there is no debris or foreign objects (chips, etc.) inside the nut or on the spindle thread. Otherwise, you risk damaging the thread.

4. Screw the nut with the collet inserted into it on the spindle with your hands for a couple of turns. Then take wrenches of suitable sizes, fix the spindle rotor with one wrench, tighten the nut with the other.

5. When installing the tool in a multi-spindle system, do not tighten the nut immediately. Install the tool in all spindles, then lower the spindles so that the tool touches a flat surface. Then adjust the tool overhang so that the tool touches all spindles. Secure all nuts with a wrench.

	To remove the collet, you first need to move it sideways until it clicks, then it will jump out of the nut groove.

5.12 TOOL INSTALLATION (ATC SPINDLE)

The auto-changing spindles are adapted to work with collet chucks with a BT/ISO taper.

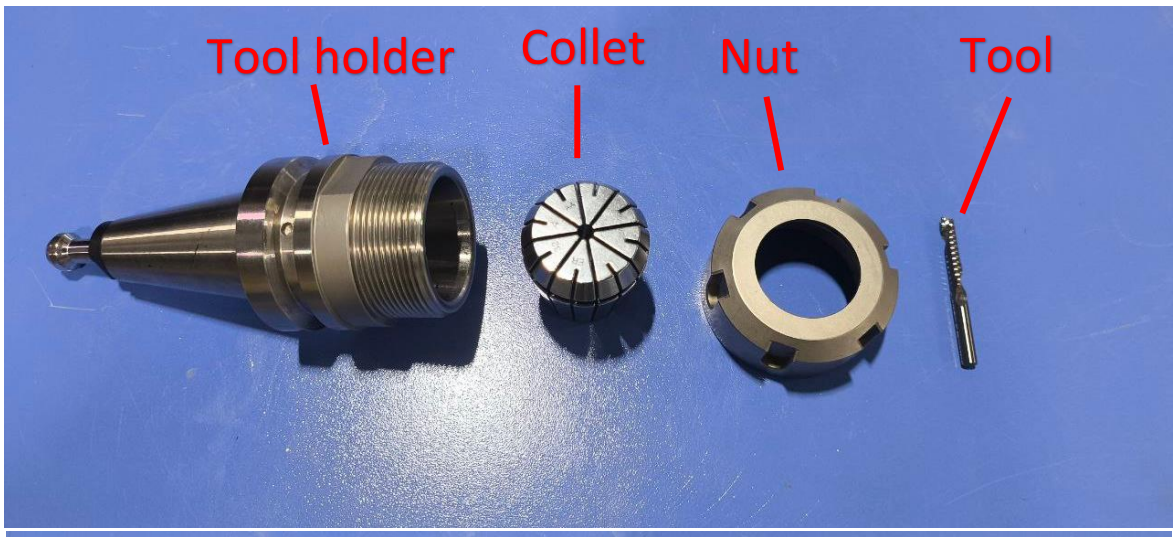

The procedure for installing the tool in the collet chuck:

1. Insert the collet into the nut until it clicks into place.
2. Take a tool with a shank diameter that fits the collet seat.
3. Insert the tool into the collet.
4. Place the tool holder in the chuck vice on the machine and fasten.

5. Insert the collet with the tool into the chuck and tighten the nut with your hand for several turns. Then tighten the nut with a wrench.

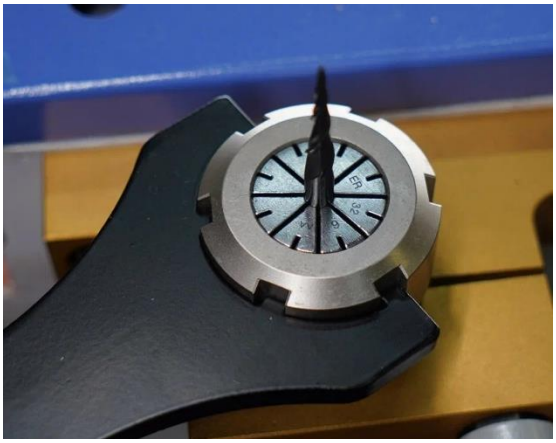

	First, you need to insert the collet into the nut, and only then the cutter into the collet. To pull out the collet, you must first move it sideways until it clicks, then it will jump out of the nut groove.

CHAPTER 6. CONTROL SYSTEM

6.1. RICHAUTO CONTROLLER

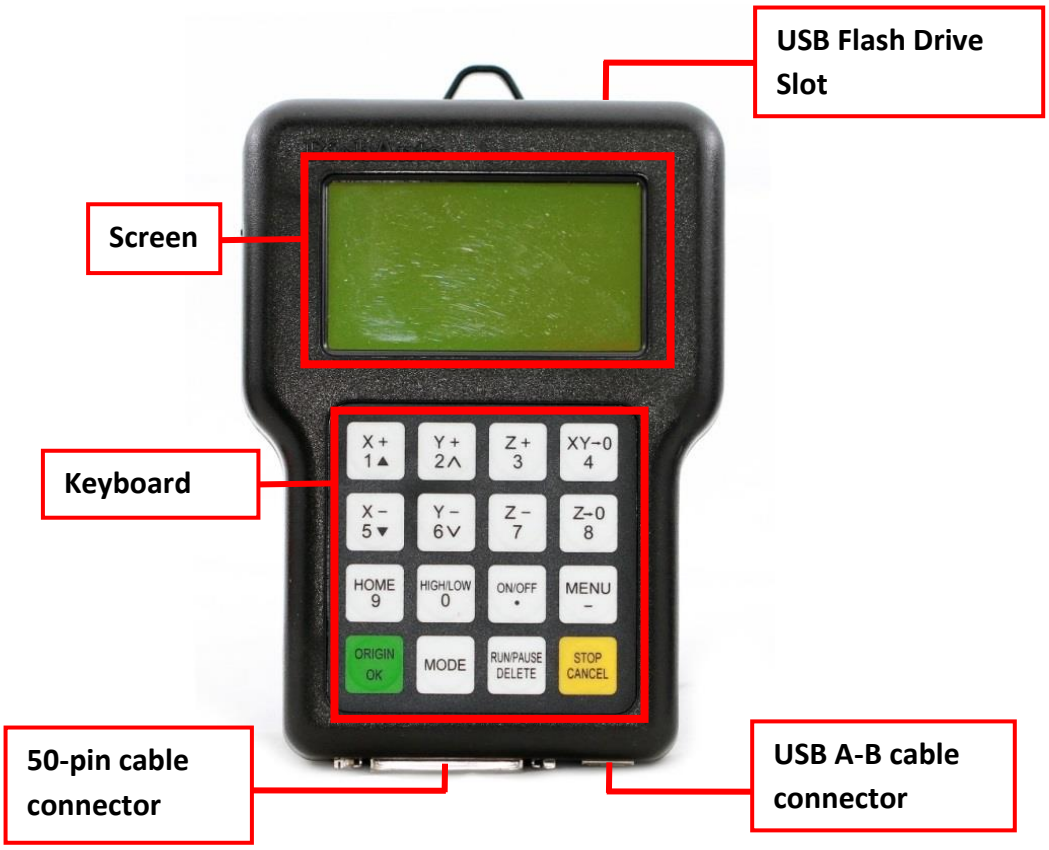

The keyboard contains 16 function buttons:

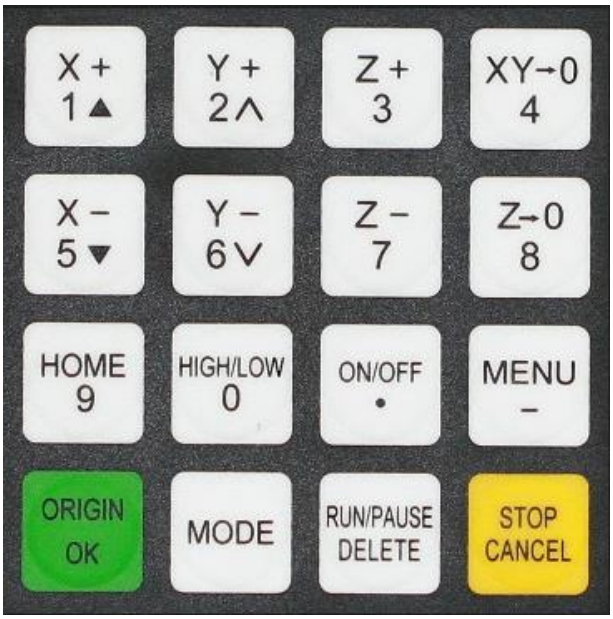

List of basic single-click commands:

Button	Team
X+ 1▲	Positive movement along the X-axis; in the menu – "Up", enter the number 1
Y+ 2∧	Positive movement on the Y axis, entering the number 2, changes the value in the selected menu item
Z + 3	Positive movement in the Z axis, entry of number 3, increase in spindle speed in operation
XY→0 4	Zeroing the spindle in the X,Y axes, entering the number 4
X− 5▼	Negative movement along the X axis, in the menu – "Down", entering the number 5
Y− 6∨	Negative Y-axis movement, slowing down cutting speed, number 6, changes the value in the selected menu item
Z − 7	Negative Z-axis movement, number 7 input, spindle speed reduction in operation

Z → 0 8	Zeroing the spindle in the Z axis, entering the number 8
HOME 9	Leaving for the house in all axes, entering the number 9
HIGH/LOW 0	Manual motion mode, switch between high and low speed, enter the digit 0, switch between the working and mechanical coordinate systems when operating in automatic mode
ON/OFF •	Start/stop spindle, decimal point input
MENU —	Starting the menu, entering the "-" symbol, checking the status of the operation
ORIGIN OK	Moving the tool to the working position in all axes, confirming the movement, input, operation
MODE	Manual control, modes: continuous, step, and full cycle.
RUN/PAUSE DELETE	Start/pause, delete incorrectly entered characters

STOP CANAEL	Stop an operation, stop movement, cancel an operation entry

List of combined teams:

	Combination button	Function
1	MENU – "+"0—9"Number Buttons	Switch the coordinate system (0 for the mechanical coordinate system , 1 - 9 for the work coordinate system)
2	MENU – "+" ON/OFF •	Start Z-axis automatic tool setting
3	RUN/PAUSE DELETE "+"1—8" Number Buttons	Start the breakpoints processing (support number 1 - 8)
4	RUN/PAUSE DELETE "+" HIGH/LOW 0	Start advanced processing
5	ON/OFF • "+" Z+ 3 / Z− 7	To switch gear shaft under manual mode
6	RUN/PAUSE DELETE "+" HOME 9	Repeat last time processing
7	MODE "+" Z→0 8	Set stop position
8	MENU – "+" ORIGIN OK	System upgrade
9	ORIGIN OK "+" STOP CANCEL	Quit buttons check

Important: Do not use flash drives with more than 4 GB of memory.

6.2 RUNNING THE PROGRAM VIA FLASH DRIVE

There is a USB socket at the top of the controller.

1. Download your program to a USB drive.
2. Insert the USB drive into the USB connector of the controller.

3. Press the RUN PAUSE/DELETE button. The UDisc File inscription will appear on the display.

4. Click OK. As a result, the screen will display what is on the USB drive.

5. Use the arrow buttons to select the file you want to load into the controller.
6. Select, and then click OK.
7. Check that the parameters are correct, and click OK

8. After downloading the code/program, the machine will start working.

Setting the parameters for this option is done in advance, but it is recommended to check the key points. To do this, start the machine and go to the Machine setup section.

Settings:

Settings M1		6090	1313	1325	1616	2030	2040
Pulse Equival	X	68.570					
	Y	68.570					
	Z	160					
Table size	X	600	1300	1300	1600	2100	2100
	Y	900	1300	2500	1600	3100	4100
	Z	300					
Spindle Setup	Delay on	10.000					
	Delay off	0.0					
Home Setup:	Home speed X	2000					
	Home speed Y	2000					
	Home speed Z	1800					
Home Order		Z, X and Y					
Acceleration	Accel Type	SCurve					
	Ln Accel	600					
	Cv Accel	1000					
	J Accel	8000					
Start Speed	Skip	100					
	Cmpl	200					
Max Speed Limit	X-	25000					
	X+	25000					
	Y-	25000					
	Y+	25000					
	Z-	3000					
	Z+	3000					

Detailed instructions for working with the Rich Auto system will be attached in a separate user manual.

6.3 NC STUDIO

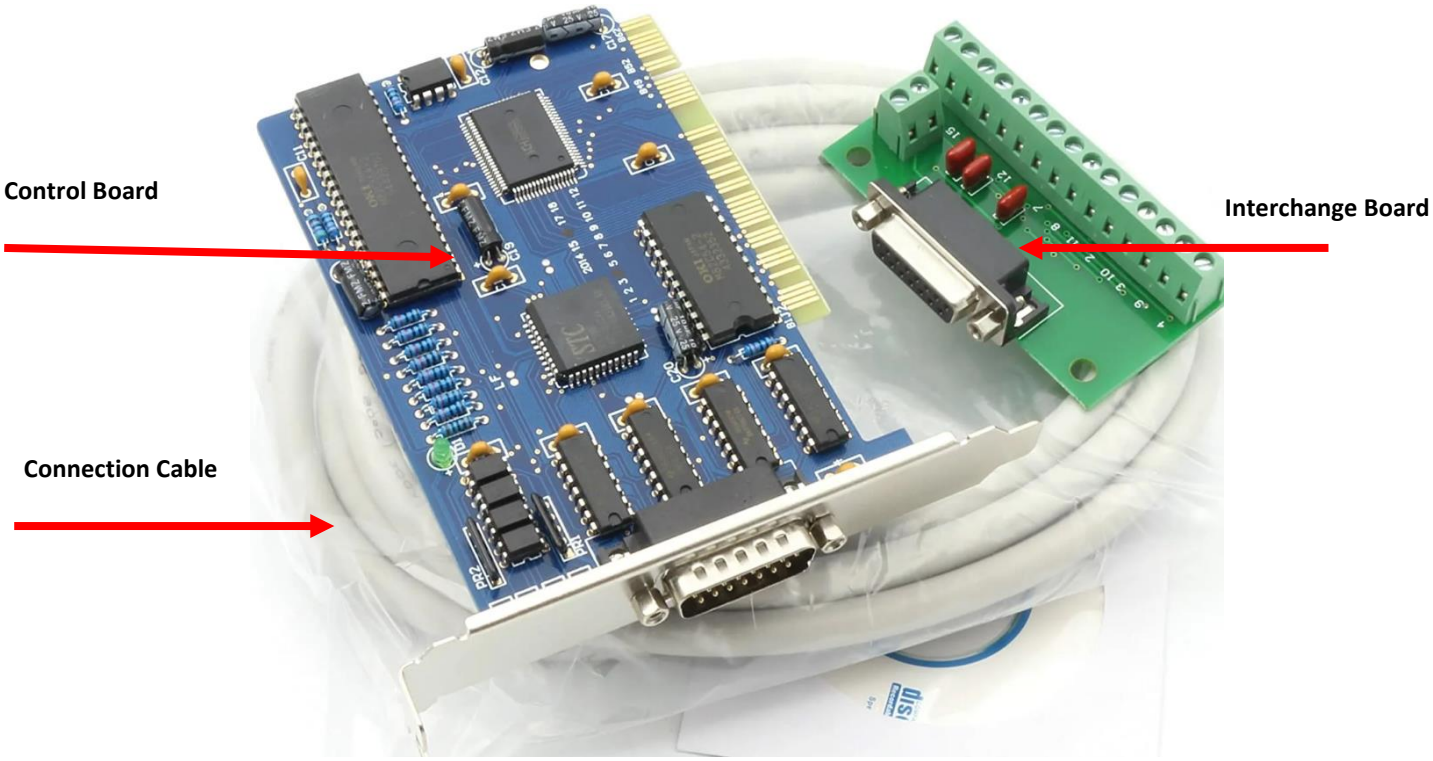

The NC Studio system requires a personal computer, because The control board is mounted in the PCI slot of the personal computer:

Important: The control board is mounted ONLY in the PCI slot. PCI Express and others won't work!

The isolation board is located inside the power cabinet.

Minimum system requirements:

- Operating system: Windows XP (SP2) x86;
- Processor: Intel 2 GHz or equivalent Athlon X2;
- RAM: 1 GB;
- Hard Drive: 10 GB of free space;
- Video card: with 128 MB video memory;
- PCI slot

Important: NC Studio is only supported on 32-bit operating systems.

6.4 INSTALLING THE NC STUDIO DRIVER

After installing NC Studio, you need to install the driver.

1. Go to Device Manager.
   Start → Control Panel → System → Device Manager
2. In the Other devices tab, find an undefined device
3. Double-click on this device. In the window that appears, go to the **Driver tab** and click **Update**
4. In the window that appears, click "Search for drivers on this computer"
5. Specify the path to the driver. By default, the program is installed in the folder **C://Program files/NCStudio 5.5.60**
6. **After clicking the "Next" button, a window will pop up, click "Install this driver anyway"**
7. Run the software and enter the machine data in the Params → Manufactory tab (password ncstudio).

Trace | Log | Manager | Params | Editor | IOState

Machining

Manufactory

Workbench

Set the workbench dimensions, which decide when the system raises an out-of-limit alarm after the mechanical coordinate has become effective.

Start (Mechanical) Coor.			End (Mechanical) Coor.		
X:	0	mm	X:	600	mm
Y:	0	mm	Y:	900	mm
Z:	-200	mm	Z:	0	mm

Note: Please restart after changing above Parameters.

Mobile Calibrator

Thickness of the mobile calibrator: 19.1 mm

Motor Parameter

Input displacement-per-pulse of each axis, which are the displace- ment between cutter and workbench whenever the motor receives a pulse:

X: 9800651715545 mm/pulse

Y: 9800651715545 mm/pulse

Z: 0.00625 mm/pulse

Set the angle-per-pulse while Y axis is a revolving axis:

0.006 deg/pulse

Start-up Feedrate: 100 mm/min

the maxium feedrate of z axis: 3000 mm/min

Acceleration

Linear Acceleration: 400 mm/sec ^{2}

Connection Acceleration: 600 mm/sec ^{2}

Spindle

Maximum rpm of the spindle: 24000 rpm

Startup/stop delay of the spindle: 10 millisecond

Wattsan

Menu items:

M1	6090	1313	1325	1616	2030	2040
End (mechanical) Coor. X	600	1300	1300	1600	2100	2100
End (mechanical) Coor. Y	900	1300	2500	1600	3100	4100
Start (mechanical) Coor. Z	300					
Mobile Calibrator	Tool probe height in mm					
Motor Parameter X	0,0145836371591075					
Motor Parameter Y	0,0145836371591075					
Motor Parameter Z	0,00625					
Linear Acceleration	600					
Connection Acceleration	1000					
The maximum federate of Z axis	3000					
Maximum rpm of the spindle	18000/24000 – depending on configuration					

Params Machining Speed Settings→

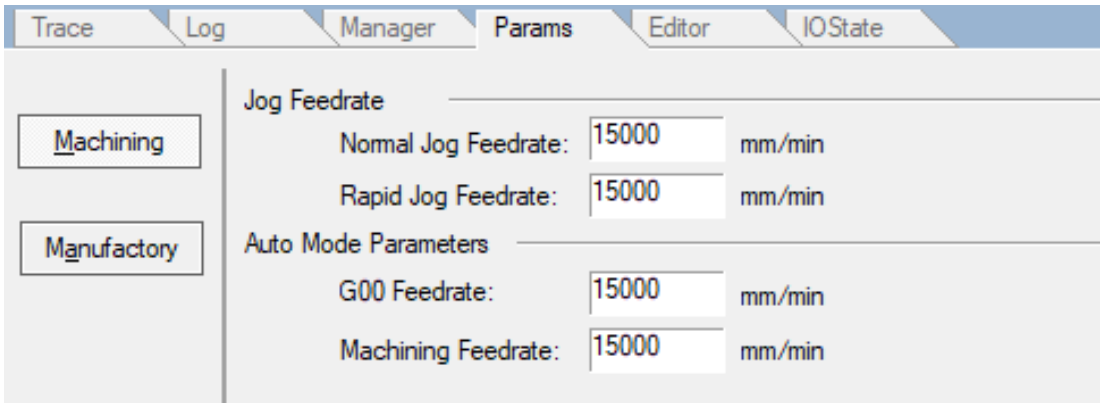

Detailed instructions for working with NC Studio software will be attached in a separate user manual.

CHAPTER 7. GET STARTED

7.1 STARTING THE MACHINE

Before starting the machine, it is necessary:

- ✓ Check that there are no forgotten tools or other foreign objects in the mechanisms of the machine.
- ✓ Check the tightening of the joints on the machine and its parts that need to be tightened.
- ✓ Check all electrical connections, make sure all cables are connected correctly and connectors are secured.
- ✓ Check the power supply parameters and their compliance with the characteristics of the machine and the connected load.
- ✓ Check the proper functioning of protective devices
- ✓ Ground the machine, the console and the control unit by connecting to the general workshop grounding system.
- ✓ After each turn on the machine, it is mandatory to perform the "Leaving for the house" procedure.

	Every day, before starting work, it is recommended to warm up the spindle (Start the spindle for 10-15 minutes at a rotation speed of 10-12 thousand revolutions)

7.1.1 MACHINE START-UP PROCEDURE:

In the control unit, turn on the main switch:

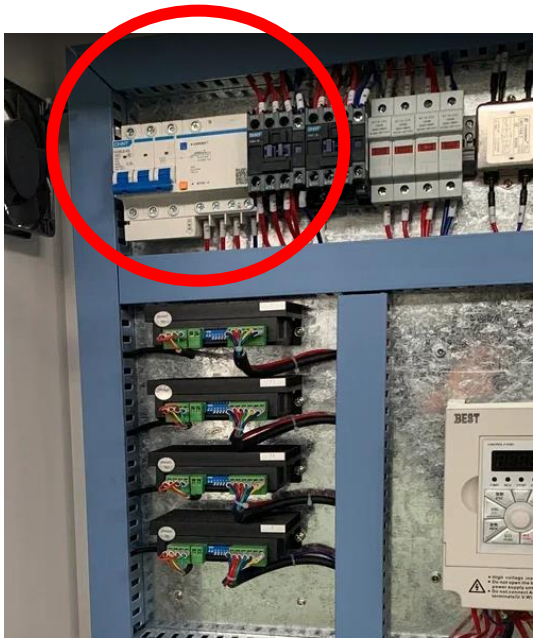

Open the emergency shutdown button by scrolling it clockwise:

Press the top green button:

Turn on the chiller:

7.1.2. PROCEDURE "HOMING"

After turning on the machine, it is mandatory to perform the procedure "Going home" ("Return to zero point", "Return to the point of origin", "Return to machine zero"). This is necessary for it to correctly determine its position relative to the desktop.

Take the controller and select All **axis home from the menu**:

Click on the OK button:

Make sure that the machine performs the procedure correctly.

7.2 GANTRY ALIGNMENT

7.2.1 CHECKING GANTRY DIAGONALS

To check the diagonals, you will need:

1. Molar tape
2. Measuring tape measure
3. Marker
4. Cardboard sheets

Glue pre-cut pieces of cardboard on the four sides of the working field of the machine.

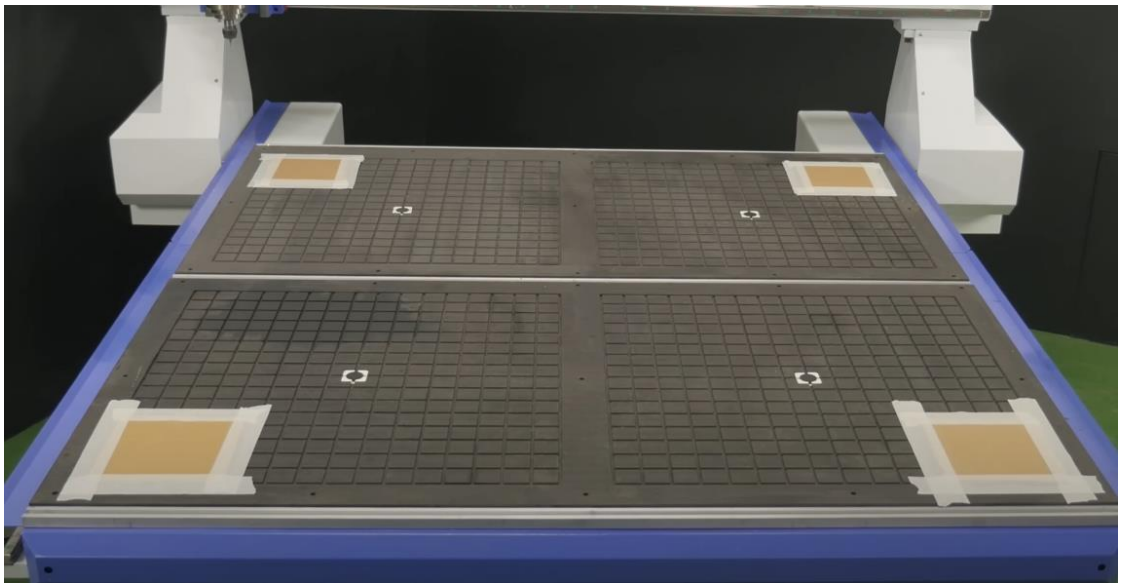

Make a hole about halfway through our first piece of cardboard

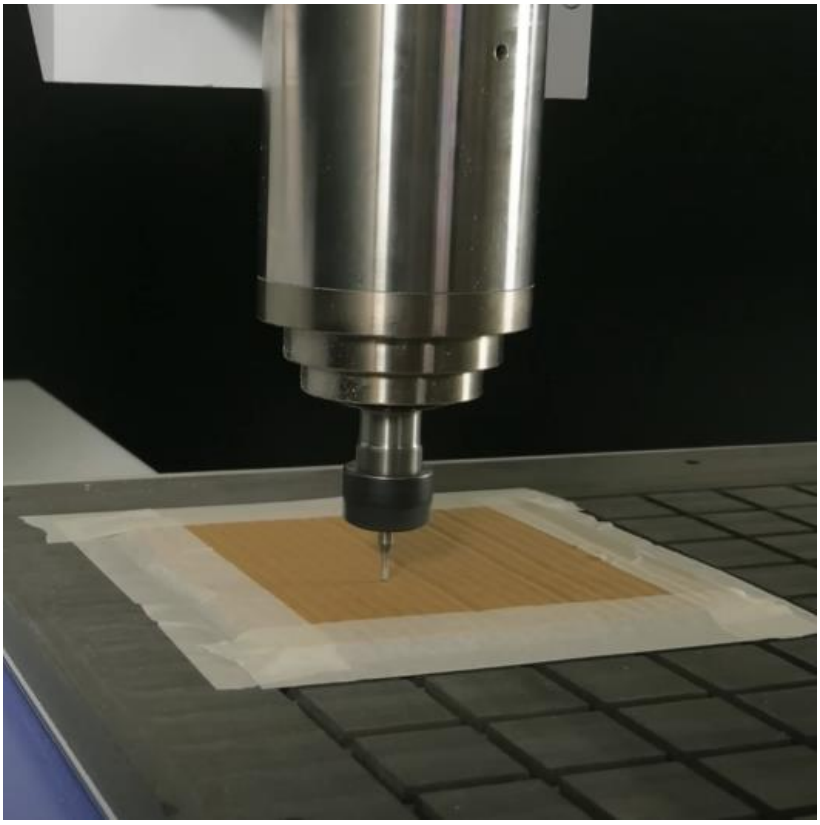

Before moving to the next piece of cardboard, press the MODE button on the remote control. and set the distance so that the cutter is above the next piece of cardboard.

Always remember that the mode - "movement with a given distance" must be switched and then make the next hole.

Thus, make holes on all 4 sides of our working field. When we connect an imaginary line between the points, we get a square, at which we will measure the diagonals, they must be the same.

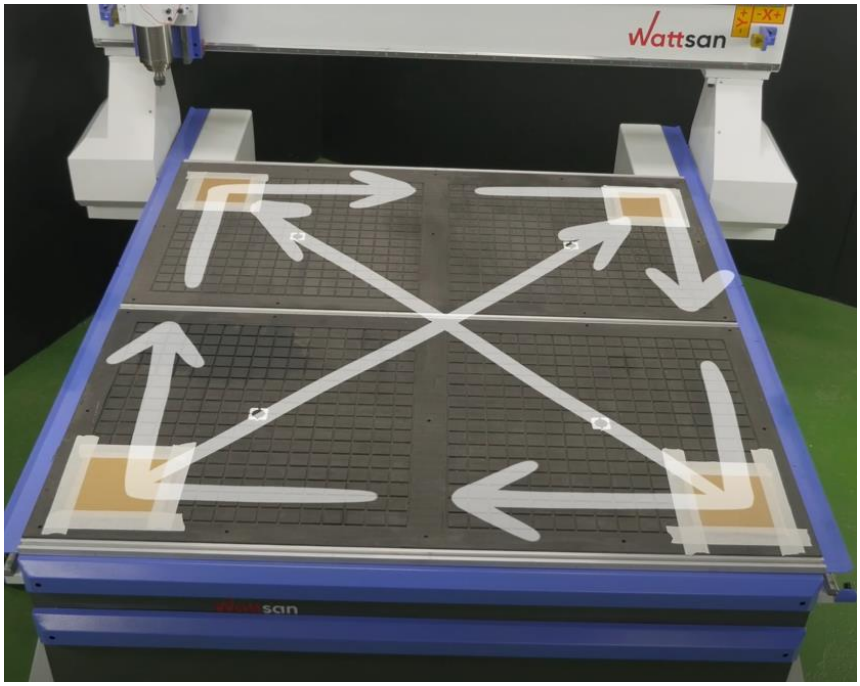

When measuring diagonals, place a strip of measuring tape a few centimeters higher from the beginning, so that we will definitely avoid misalignment during measurements. Fix one end of the measuring tape with the face in the center of the hole and measure the distance to the center of the hole, which is diagonal.

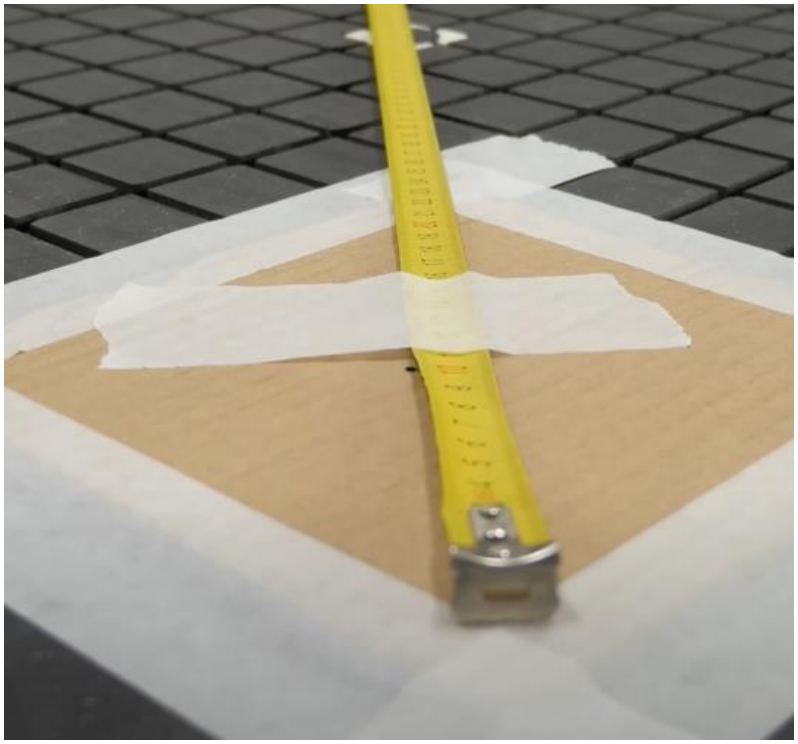

Repeat this procedure with opposite holes and record the measurements.

7.2.2 ALIGNMENT OF GANTRY DIAGONALS

If the diagonals are different, you need to align the gantry:

1. Remove the guards on both sides by removing the screws

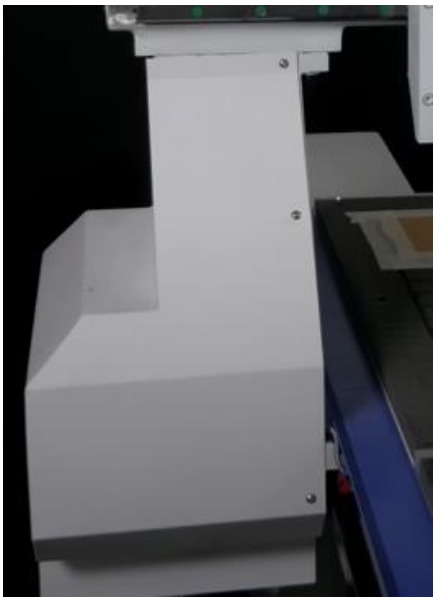

2. Loosen the gantry bolts

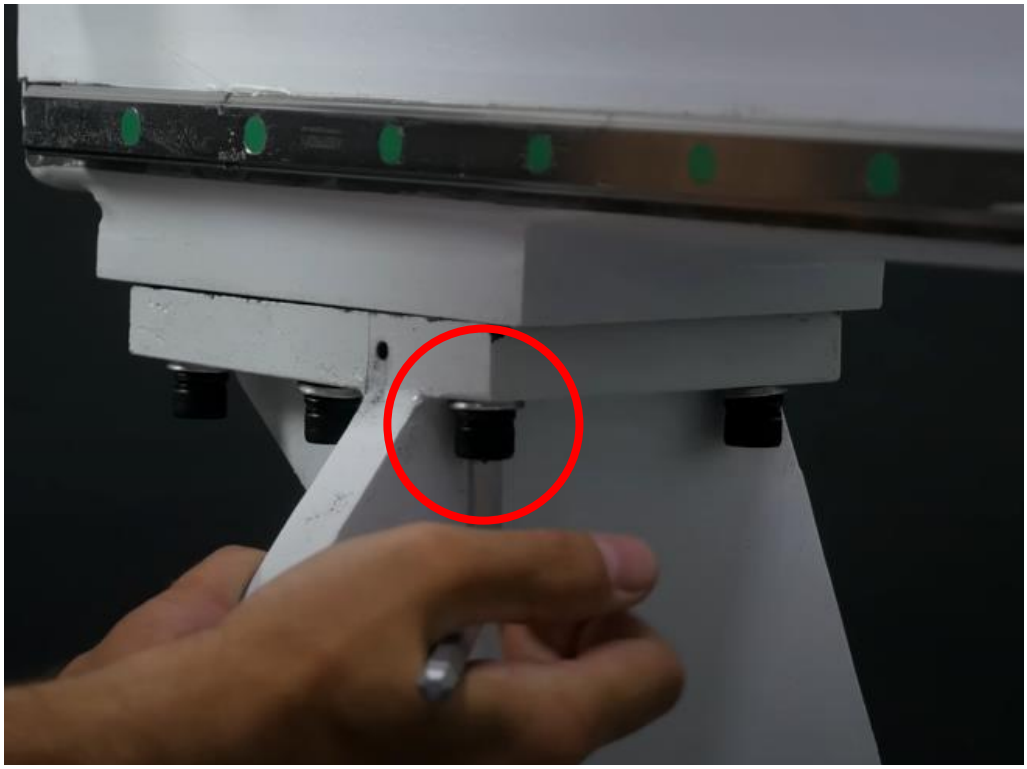

3. Disconnect the control connector on one of the Y-axis drivers. **Do not disconnect the right power connector!**

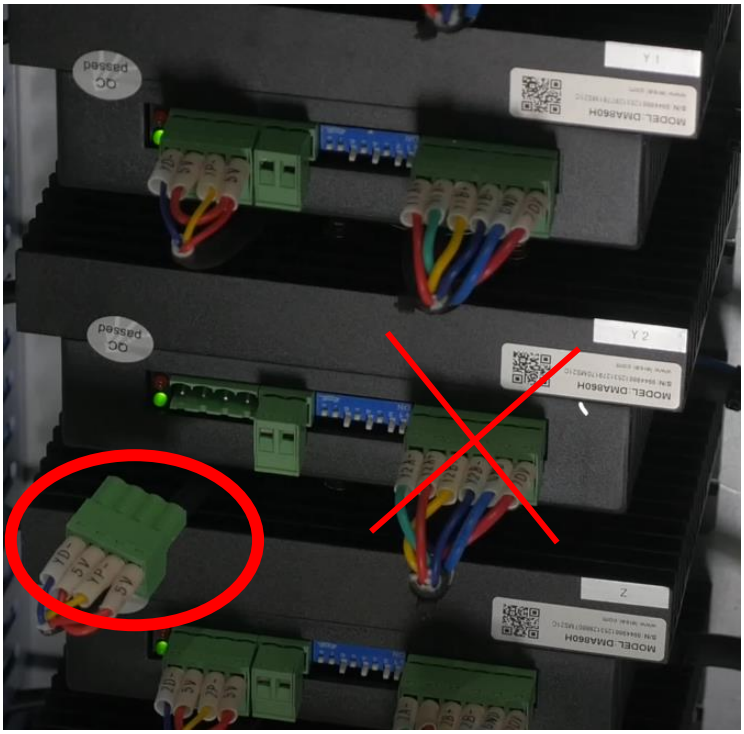

4. Then, using the remote control, move our gantry in HIGH mode forward or backward, depending on how much your diagonal is shifted and in which direction

5. Insert the plug into the driver connector and tighten the gantry bolts

6. Check the evenness of the diagonals by doing the procedure from step 6.9.1.

After achieving a satisfactory result, fix the protective covers.

CHAPTER 8. MACHINE MAINTENANCE

Interval	Maintenance
Daily	At the end of each shift, clean the work surface of chips, dust and material residue using an industrial vacuum cleaner or brush.
	Inspect the cutting edges and the condition of the tool. If it shows signs of wear or damage, replace it with a new one.
	Check the coolant level in the system and add it to the correct level if necessary.
Monthly	Inspect guides, ball screws, and gear racks for wear. If necessary, clean and apply a fresh coat of lubricant.
	Check the oil level. Add if necessary.
3 months	Replace the water in the chiller.
6 months	Check the condition of the screw connections.
Perforce	Carry out external cleaning of the machine with a soft and clean cloth.

All moving parts of the milling and engraving machine require external condition monitoring and replacement in case of significant wear.

CHAPTER 9. TROUBLESHOOTING

	Codes and error messages are displayed in the control system. Study them and check the documentation to determine possible causes.

Symptoms	Reason	What to do
The machine does not turn on.	• An emergency shutdown has been activated. • Lack of power supply. • Faulty main switch. • Problems with cables or the power grid.	• Open the emergency shutdown button pins by turning the button clockwise. • Check your network connection and cables. • Make sure the main switch is working. • Check the circuit breakers and fuses.
The machine turns on, but the spindle does not.	• The error on the spindle	• Turn off the machine and wait around 1 minute before turning it on.
Reduced machining accuracy.	• Wear of guides or ball screws. • Backlash in joints and fasteners.	• Check the condition of the rails and replace the worn parts. • Tighten the fasteners and check the backlash in the ball screws. **All work with the mechanics of the machine should be carried out with the power supply turned off!**
Jerks when moving.	• Lack of lubrication on the guides. • Engine breakdown or bearing problems.	• Apply lubricant to the guides. • Check the motor and bearings. Replace faulty components if necessary.
Spindle overheating	• Low coolant level. • Breakdown of the cooling system pump. • Blockage in the hoses of the water circuit.	• Check the coolant level. • Check the operation of the pump and replace it if it malfunctions. • Clean the cooling hoses.

CHAPTER 10. WARRANTY

In case of equipment breakdown during its warranty period due to a defect caused by the manufacturer, repair is carried out by the supplier's company free of charge.

However, consumable parts (tools, hoses, fittings, cables etc.) are not eligible for warranty service.

For free repair or replacement of accessories, the buyer bears the cost of delivering new components from the place of their storage to the buyer's address, and, if necessary, the buyer bears the cost of the specialist's visit to the place of work.

If the equipment failure is caused by a defective part or assembly of the equipment, this part or assembly is repaired or replaced free of charge.

Defective components and parts must be returned to the supplier.

If the malfunction is not caused by the quality of parts or components of the equipment, the buyer will have to pay the cost of repair as well.

Warranty service is also not subject to malfunctions due to improper use of equipment, non-compliance with maintenance rules, operating conditions, as well as warnings specified in manuals and on warning plates that have arisen during the warranty period.

Also, a prerequisite is that your equipment and peripherals are grounded and operated through a voltage stabilizer.